SENTECH

Dual Scanning Line Scan Series

Product Specifications

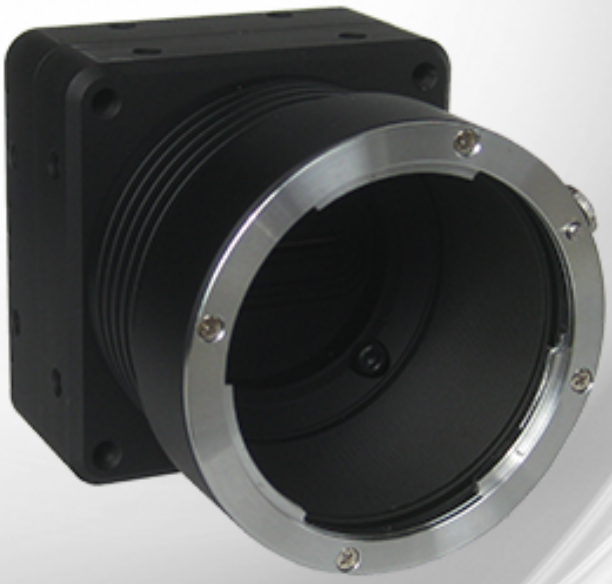

Features

- High Speed Camera Link Output
- 8K ~ 2K Pixels
- C, F, M42 or M72 Mounts
- CMOS Sensors

Safety Precautions

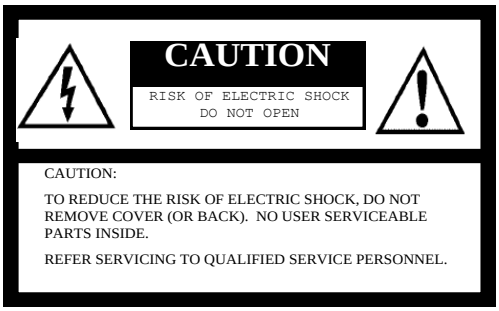

For U.S.A.

Warning:

This equipment generates and uses radio frequency energy and if not installed and used properly, I.e., in strict accordance with the instruction manual, may cause harmful interference to radio communications. It has been tested and found to comply with the limits for a Class A computing device pursuant to Subpart J of Part 15 of FCC Rules, which are designed to provide reasonable protection against such interference when operated in a commercial environment.

For Canada

Warning:

This digital apparatus does not exceed the Class A limits for radio noise emissions from digital apparatus set out in the Radio Interference Regulations of the Canadian Department of Communications.

The lightning flash with arrowhead symbol, within an equilateral triangle, is intended to alert the user to the presence of uninsulated "dangerous voltage" within the product's enclosure that may be of sufficient magnitude to constitute a risk of electric shock to persons.

The exclamation point within an equilateral triangle is intended to alert the user to the presence of important operating and maintenance (servicing) instructions in the literature accompanying the appliance.

WARNING:

TO PREVENT FIRE OR SHOCK HAZARD, DO NOT EXPOSE THIS APPLIANCE TO RAIN OR MOISTURE.

Product Precautions

- Handle the camera with care. Do not abuse the camera. Avoid striking or shaking it. Improper handling or storage could damage the camera.
- Do not pull or damage the camera cable.
- During camera use, do not wrap he unit in any material. This will cause the internal temperature of the unit to increase.
- Do not expose the camera to moisture, or do not try to operate it in wet areas.
- Do not operate the camera beyond its temperature, humidity and power source ratings.
- While the camera is not being used, keep the lens or lens cap on the camera to prevent dust or contamination from getting in the CCD or filter area and scratching or damaging this area.
- Do not keep the camera under the following conditions:
    - In wet, moist, and high humidity areas
    - Under hot direct sunlight
    - In high temperature areas
    - Near an object that releases a strong magnetic or electric field
    - Areas with strong vibrations
- Use a soft cloth to clean the camera. Use pressured air spray to clean the surface of the glass. DO not scratch the surface of the glass.

Contents

1. General Specifications

1.1 Electronic Specifications

		FS-B2KU7DCLU	FS-B4KU7DCLU	FS-B8KU7DCLU
Image sensor		2k CMOS image sensor DR-2X2K-7-inver (AWAIBA)	4k CMOS image sensor DR-2X4K-7-inver (AWAIBA)	8k CMOS image sensor DR-2X8K-7 (AWAIBA)
Active pixels		2,048 pixels x 2lines	4,096 pixels x 2lines	8,192 pixels x 2lines
Pixel size		7(H) x 7(V)um (7um pitch)		
Photo array length		14.336 mm	28.672 mm	57.344 mm
Data rate		85MHz x 4tap	85MHz x 8tap	85MHz x 8tap
Maximum line rate		160kHz (85MHz x 4tap)*	160kHz (85MHz x8tap)*	80kHz (85MHzx8tap)*
Video output		Camera Link Medium configuration(8, 10, 12bit)	Camera Link Full configuration (8bit) Camera Link Medium / Base Configuration (8, 10, 12bit)	
Power	Input voltage	+12 Vdc to +24 Vdc		
	Consumption	6.0 W(typ)	6.0 W(typ)	8.5 W(typ)
Communication		RS232C via Camera Link connecter		
Functions		High speed exposure control External trigger control Flat Field Correction(FFC) Binning 1Line delay FieldUpdate		

*Note: For further information on available Maximum Line Rate & Data Rates, please refer to section 4. Video Output Formats.

1.2 Optical Specifications

Product	FS-B2KU7DCLU	FS-B4KU7DCLU	FS-B8KU7DCLU
Fill Factor	100%		
Responsivity	77DN/nj/cm2		

1.3 Mechanical Specifications

Product	FS-B2KU7DCLU	FS-B4KU7DCLU	FS-B8KU7DCLU
Dimensions	56(W) x 58(H) x 26.5(D) mm		80(W) x 100(H) x 38.1(D) mm (excluding the connector)
Lens mount	F, C, M42 mount	F , M42 mount	M72 mount(P=0.75mm)
Weight	Approx. 198g		Approx. 453g
Interface connectors	Camera Link connector (MDR) x2 Power connector (6pin connector)		

1.4 Environmental Specifications

Product	FS-B2KU7DCLU	FS-B4KU7DCLU	FS-B8KU7DCLU
Operating temperature	0 to 40 deg. C		
Storage temperature	-30 to 65 deg. C		
RoHS	RoHS compliance		

2. Product Naming Method

2.1 Product Number

FS	-	B	8K	U7	D	CL	U	-	M72
(1)		(2)	(3)	(4)	(5)	(6)	(7)		(8)

(1) Series
- (2) BW / Color
  - B: Black and White
  - C: Color
- (3) Number of pixels
  - 16: 16K
  - 8: 8K
  - 4: 4K
  - 2: 2K
- (4) Pixel Size
  - U14: 14um
  - U35: 35um
  - U7: 7um
- (5) Line Number
  - None: 1 line (Single)
  - D: 2 lines (Dual)
  - Q: 4 lines (Quad)
- (6) Output type
  - CL: Camera Link
  - GE: GigE Vision
  - CX: CoaXPress
- (7) Software type
  - Non: ASCII communication
  - U: Fieldupdate type(Binary communication)
- (8) Mount type
  - C: C mount
  - F: F mount
  - M42: M42 mount
  - M72: M72 mount

2.2 Product Line

Model Number	Description
FS-B8KU7DCLU-M72	B&W 8K Dual line Camera Link 7umx7um M72-Mount
FS-B4KU7DCLU-F	B&W 4K Dual line Camera Link 7umx7um F-Mount
FS-B4KU7DCLU-M42	B&W 4K Dual line Camera Link 7umx7um M42-Mount
FS-B2KU7DCLU-F	B&W 2K Dual line Camera Link 7umx7um F-Mount
FS-B2KU7DCLU-C	B&W 2K Dual line Camera Link 7umx7um C-Mount
FS-B2KU7DCLU-M42	B&W 2K Dual line Camera Link 7umx7um M42-Mount

3. Connector Specifications

3.1 FS-B2KU7DCLU / FS-B4KU7DCLU

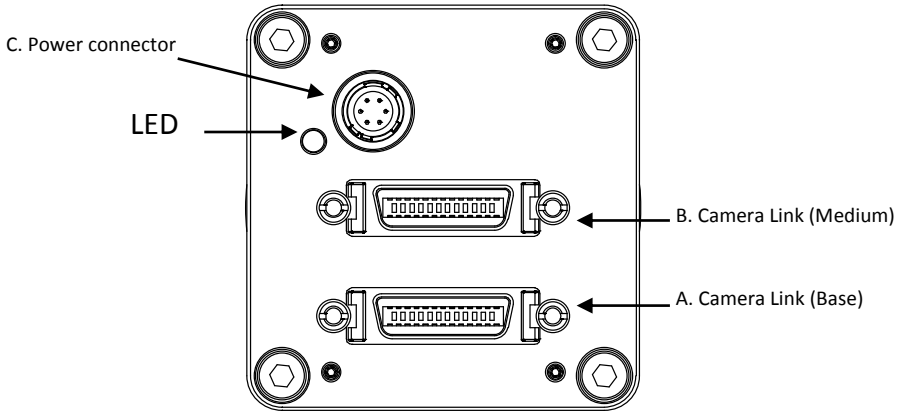

A. Camera Link Connector (Base): MDR Receptacle (3M)

B. Camera Link Connector (Medium): MDR Receptacle (3M)

Caution: The same cable length is required when the camera is connected via two Camera Link cables.

C. Power Connector HR10A-7R-6PB (Hirose or Equivalent)

This connector is for +12 Vdc to +24 Vdc power input.
The LED will show a RED light to indicate the camera is powered on.

3.2 FS-B8KU7DCLU

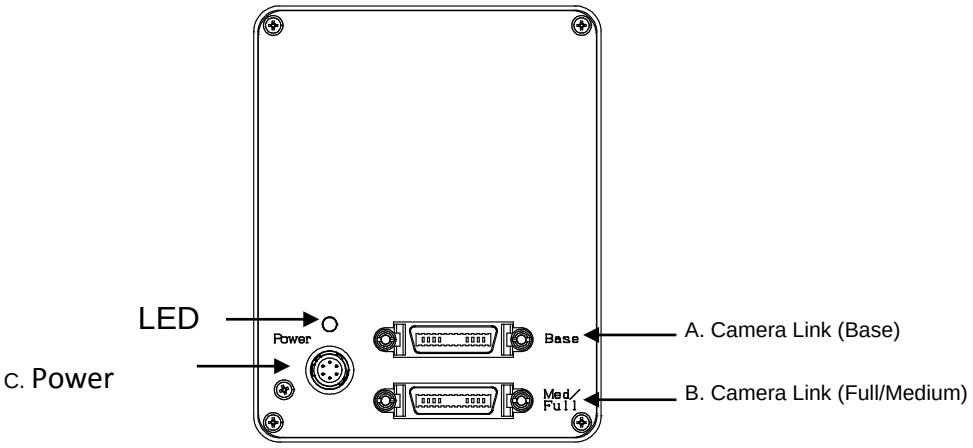

A. Camera Link Connector (Base): MDR Receptacle (3M)

B. Camera Link Connector (Medium): MDR Receptacle (3M)

Caution: The same cable length is required when the camera is connected via two Camera Link cables.

C. Power Connector: HR10A-7R-6PB (Hirose or equivalent)

This connector is for +12 Vdc to +24 Vdc power input.

The LED will show a RED light to indicate the camera is powered on.

3.3 Pin Assignment of the Connectors

A. Camera Link connector (Base): MDR Receptacle (3M)

Pin No.	Signal name	Pin No.	Signal name
1	GND	14	GND
2	X0-	15	X0+
3	X1-	16	X1+
4	X2-	17	X2+
5	Xclk-	18	Xclk+
6	X3-	19	X3+
7	SerTC+	20	SerTC-
8	SerTFG-	21	SerTFG+
9	CC1- (for the external sync signal input)	22	CC1+ (for the external sync signal input)
10	CC2+	23	CC2-
11	CC3-	24	CC3+
12	CC4+	25	CC4-
13	GND	26	GND

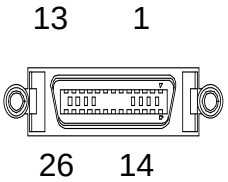

B. Camera Link connector (Full / Medium): MDR Receptacle (3M)

Pin No.	Signal name	Pin No.	Signal name
1	GND	14	GND
2	Y0-	15	Y0+
3	Y1-	16	Y1+
4	Y2-	17	Y2+
5	Yclk-	18	Yclk+
6	Y3-	19	Y3+
7	100 Ohm terminated	20	100 Ohm terminated
8	Z0-	21	Z0+
9	Z1-	22	Z1+
10	Z2-	23	Z2+
11	Zclk-	24	Zclk+
12	Z3-	25	Z3+
13	GND	26	GND

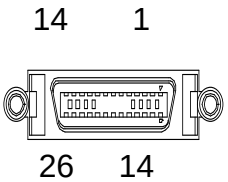

signal name	I/O	explanation
CC1	I	Ext TRG. As for the detail,please refer to the section 4.
CC2	–	Spare
CC3	–	Spare
CC4	–	Spare
SerTC	I	Serial communication from the frame grabber.
SerTFG	O	Serial communication to the frame grabber.

C. Power connector: HR10A-7R-6PB (Hirose or equivalent) (Cable connector: HR10A-7P-6S or equivalent)

Pin No.	Signal name	IN/OUT	Voltage
1	+12 V	IN	+12 V to +24V
2	+12 V	IN	+12 V to +24V
3	+12 V	IN	+12 V to +24V
4	GND		
5	GND		
6	GND		

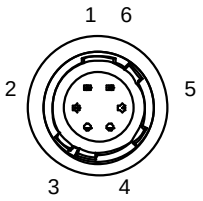

3.4 Bit Assignment

3.4.1 Full Configuration

Base Configuration(Base connector)			
Port/bit	8-bit x 8	Port/bit	8-bit x8
Port A0	A0	Port C0	C0
Port A1	A1	Port C1	C1
Port A2	A2	Port C2	C2
Port A3	A3	Port C3	C3
Port A4	A4	Port C4	C4
Port A5	A5	Port C5	C5
Port A6	A6	Port C6	C6
Port A7	A7	Port C7	C7
Port B0	B0		
Port B1	B1		
Port B2	B2		
Port B3	B3		
Port B4	B4		
Port B5	B5		
Port B6	B6		
Port B7	B7		

Full Configuration(Full connector)					
Port/bit	8-bit x 8	Port/bit	8-bit x8	Port/bit	8-bit x8
Port D0	D0	Port F0	F0	Port H0	H0
Port D1	D1	Port F1	F1	Port H1	H1
Port D2	D2	Port F2	F2	Port H2	H2
Port D3	D3	Port F3	F3	Port H3	H3
Port D4	D4	Port F4	F4	Port H4	H4
Port D5	D5	Port F5	F5	Port H5	H5
Port D6	D6	Port F6	F6	Port H6	H6
Port D7	D7	Port F7	F7	Port H7	H7
Port E0	E0	Port G0	G0		
Port E1	E1	Port G1	G1		
Port E2	E2	Port G2	G2		
Port E3	E3	Port G3	G3		
Port E4	E4	Port G4	G4		
Port E5	E5	Port G5	G5		
Port E6	E6	Port G6	G6		
Port E7	E7	Port G7	G7		

3.4.2 Medium Configuration

12bit mode

Base connector			
Port/bit	12-bit x 4taps	Port/bit	12-bit x 4taps
Port A0	A0	Port C0	B0
Port A1	A1	Port C1	B1
Port A2	A2	Port C2	B2
Port A3	A3	Port C3	B3
Port A4	A4	Port C4	B4
Port A5	A5	Port C5	B5
Port A6	A6	Port C6	B6
Port A7	A7	Port C7	B7
Port B0	A8		
Port B1	A9		
Port B2	A10		
Port B3	A11		
Port B4	B8		
Port B5	B9		
Port B6	B10		
Port B7	B11		

Medium connector			
Port/bit	12-bit x 4taps	Port/bit	12-bit x 4taps
Port D0	D0	Port F0	C8
Port D1	D1	Port F1	C9
Port D2	D2	Port F2	C10
Port D3	D3	Port F3	C11
Port D4	D4	Port F4	D8
Port D5	D5	Port F5	D9
Port D6	D6	Port F6	D10
Port D7	D7	Port F7	D11
Port E0	C0		
Port E1	C1		
Port E2	C2		
Port E3	C3		
Port E4	C4		
Port E5	C5		
Port E6	C6		
Port E7	C7		

10bit mode

Base connector			
Port/bit	10-bit x 4taps	Port/bit	10-bit x 4taps
Port A0	A0	Port C0	B0
Port A1	A1	Port C1	B1
Port A2	A2	Port C2	B2
Port A3	A3	Port C3	B3
Port A4	A4	Port C4	B4
Port A5	A5	Port C5	B5
Port A6	A6	Port C6	B6
Port A7	A7	Port C7	B7
Port B0	A8		
Port B1	A9		
Port B2	nc		
Port B3	nc		
Port B4	B8		
Port B5	B9		
Port B6	nc		
Port B7	nc		

Medium connector			
Port/bit	10-bit x 4taps	Port/bit	10-bit x 4taps
Port D0	D0	Port F0	C8
Port D1	D1	Port F1	C9
Port D2	D2	Port F2	nc
Port D3	D3	Port F3	nc
Port D4	D4	Port F4	D8
Port D5	D5	Port F5	D9
Port D6	D6	Port F6	nc
Port D7	D7	Port F7	nc
Port E0	C0		
Port E1	C1		
Port E2	C2		
Port E3	C3		
Port E4	C4		
Port E5	C5		
Port E6	C6		
Port E7	C7		

8bit mode

Base connector			
Port/bit	8-bit x 4taps	Port/bit	8-bit x 4taps
Port A0	A0	Port C0	C0
Port A1	A1	Port C1	C1
Port A2	A2	Port C2	C2
Port A3	A3	Port C3	C3
Port A4	A4	Port C4	C4
Port A5	A5	Port C5	C5
Port A6	A6	Port C6	C6
Port A7	A7	Port C7	C7
Port B0	B0		
Port B1	B1		
Port B2	B2		
Port B3	B3		
Port B4	B4		
Port B5	B5		
Port B6	B6		
Port B7	B7		

Medium connector			
Port/bit	8-bit x 4taps	Port/bit	8-bit x 4taps
Port D0	D0	Port F0	nc
Port D1	D1	Port F1	nc
Port D2	D2	Port F2	nc
Port D3	D3	Port F3	nc
Port D4	D4	Port F4	nc
Port D5	D5	Port F5	nc
Port D6	D6	Port F6	nc
Port D7	D7	Port F7	nc
Port E0	nc		
Port E1	nc		
Port E2	nc		
Port E3	nc		
Port E4	nc		
Port E5	nc		
Port E6	nc		
Port E7	nc		

3.4.3 Base Configuration

12bit mode

Base connector			
Port/bit	12-bit x 2taps	Port/bit	12-bit x 2taps
Port A0	A0	Port C0	B0
Port A1	A1	Port C1	B1
Port A2	A2	Port C2	B2
Port A3	A3	Port C3	B3
Port A4	A4	Port C4	B4
Port A5	A5	Port C5	B5
Port A6	A6	Port C6	B6
Port A7	A7	Port C7	B7
Port B0	A8		
Port B1	A9		
Port B2	A10		
Port B3	A11		
Port B4	B8		
Port B5	B9		
Port B6	B10		
Port B7	B11		

10bit mode

Base Configuration(Base connector)			
Port/bit	10-bit x 2taps	Port/bit	10-bit x 2taps
Port A0	A0	Port C0	B0
Port A1	A1	Port C1	B1
Port A2	A2	Port C2	B2
Port A3	A3	Port C3	B3
Port A4	A4	Port C4	B4
Port A5	A5	Port C5	B5
Port A6	A6	Port C6	B6
Port A7	A7	Port C7	B7
Port B0	A8		
Port B1	A9		
Port B2	nc		
Port B3	nc		
Port B4	B8		
Port B5	B9		
Port B6	nc		
Port B7	nc		

8bit mode

Base Configuration(Base connector)			
Port/bit	8-bit x 2taps	Port/bit	8-bit x 2taps
Port A0	A0	Port C0	nc
Port A1	A1	Port C1	nc
Port A2	A2	Port C2	nc
Port A3	A3	Port C3	nc
Port A4	A4	Port C4	nc
Port A5	A5	Port C5	nc
Port A6	A6	Port C6	nc
Port A7	A7	Port C7	nc
Port B0	B0		
Port B1	B1		
Port B2	B2		
Port B3	B3		
Port B4	B4		
Port B5	B5		
Port B6	B6		
Port B7	B7		

4. Video Output Formats

4.1 FS-B2KU7DCLU

- Selectable output modes are listed in the table below.
- Video output format can be selected through register access.

EEh	Output mode	Data rate	Number of pixels	Maximum line rate	Output bit (12h.0-1)	Sensor mode	CL cable (*1)
0	High Speed Long cable	42.5MHz x 8tap	2048 x2	156kHz(*2)	8bit	9bit	10m x2
1	High Speed	50MHz x 8tap	2048 x2	160kHz(*2)	8bit	9bit	5m x2
2	H bin Single cable	85MHz x 2tap	1024 x2	160kHz(*2)	8/10bit	9bit	5m x1
3	H bin Long cable	25MHz x 8tap	1024 x2	160kHz(*2)	8bit	9bit	10m x2
4	V bin Long Single cable	42.5MHz x 2tap	2048 x1	40kHz	8/10bit	9bit	10m x1
5	V bin Single cable	85MHz x 2tap	2048 x1	80kHz	8/10bit	9bit	5m x1
6	V bin Long cable	25MHz x 8tap	2048 x1	80kHz	8bit	9bit	10m x2
7	HV bin Single cable	85MHz x 2tap	1024 x1	80kHz	8/10bit	9bit	5m x1
8	HV bin Long cable	25MHz x 8tap	1024 x1	80kHz	8bit	9bit	10m x2
70	HV bin Single cable(AOI)	80MHz x 2tap	N x1	80kHz	8/10bit	9bit	5m x1
71	HV bin Single cable(AOI)	40MHz x 2tap	N x1	73kHz	8/10bit	9bit	10m x1
72	HV bin 4tap (AOI)	80MHz x 4tap	N x1	80kHz	8/10bit	9bit	5m x2
73	HV bin 4tap (AOI)	40MHz x 4tap	N x1	80kHz	8/10bit	9bit	10m x2
74	HV bin 8tap (AOI)	80MHz x 8tap	N x1	80kHz	8bit	9bit	5m x2
75	HV bin 8tap (AOI)	40MHz x 8tap	N x1	80kHz	8bit	9bit	10m x2
90	High Speed	50MHz x 8tap	2048 x2	160kHz(*2)	8bit	12bit	5m x2
91	High Speed Long cable	42.5MHz x 8tap	2048 x2	156kHz(*2)	8bit	12bit	10m x2
92	High Speed Long cable	40MHz x 8tap	2048 x2	146kHz(*2)	8bit	12bit	10m x2
93	H bin Single cable	85MHz x 2tap	1024 x2	160kHz(*2)	8/10/12bit	12bit	5m x1
94	H bin Single cable	45MHz x 2tap	1024 x2	74kHz(*2)	8/10/12bit	12bit	5m x1
95	H bin Long cable	40MHz x 8tap	1024 x2	160kHz(*2)	8bit	12bit	10m x2
96	H bin Long cable	25MHz x 8tap	1024 x2	160kHz(*2)	8bit	12bit	10m x2
97	V bin Single cable	85MHz x 2tap	2048 x1	80kHz	8/10/12bit	12bit	5m x1
98	V bin Long Single cable	42.5MHz x 2tap	2048 x1	40kHz	8/10/12bit	12bit	10m x1
99	V bin Long Single cable	40MHz x 2tap	2048 x1	37kHz	8/10/12bit	12bit	10m x1
100	V bin Long cable	40MHz x 8tap	2048 x1	80kHz	8bit	12bit	10m x2
101	V bin Long cable	25MHz x 8tap	2048 x1	80kHz	8bit	12bit	10m x2
102	HV bin Single cable	85MHz x 2tap	1024 x1	80kHz	8/10/12bit	12bit	5m x1
103	HV bin Single cable	40MHz x 2tap	1024 x1	73kHz	8/10/12bit	12bit	10m x1
104	HV bin Long cable	40MHz x 8tap	1024 x1	80kHz	8bit	12bit	10m x2
105	HV bin Long cable	25MHz x 8tap	1024 x1	80kHz	8bit	12bit	10m x2
106	HV bin Single cable(AOI)	80MHz x 2tap	N x1	80kHz	8/10bit/12bit	12bit	5m x1
107	HV bin Single cable(AOI)	40MHz x 2tap	N x1	73kHz	8/10bit/12bit	12bit	10m x1
108	HV bin 4tap (AOI)	80MHz x 4tap	N x1	80kHz	8/10bit	12bit	5m x2
109	HV bin 4tap (AOI)	40MHz x 4tap	N x1	80kHz	8/10bit	12bit	10m x2
110	HV bin 8tap (AOI)	80MHz x 8tap	N x1	80kHz	8bit	12bit	5m x2
111	HV bin 8tap (AOI)	40MHz x 8tap	N x1	80kHz	8bit	12bit	10m x2

*1 Reference of Camera Link cable length
(Cable quality depends on the user's choice, the value should be a reference value)
*2 The line rate is calculated twice as fast since two lines are output in one scan.

[Technical Terminology]
H bin: H Binning Mode
V bin: V Binning Mode
HV bin: HV-Binning Mode
Long Cable: The camera is capable of using a 10m Camera Link cable.
Single Cable: The camera is capable of using a single Camera Link cable.
LongSingle Cable: The camera is capable of using a single 10m Camera Link cable.

**For further information about the Binning functions, please refer to Chapter 6.1: Binning

4.1.1 Line Definition

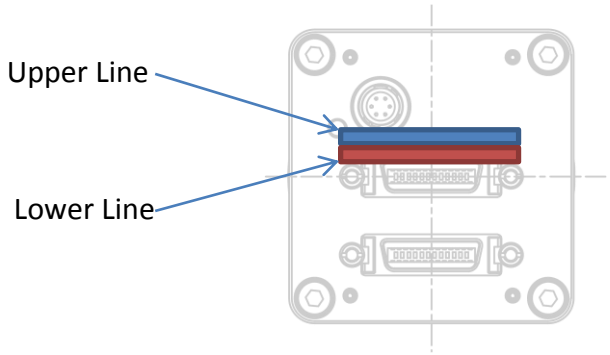

4.1.2 Video Output Format Timing Chart (High Speed Mode)

EEh = 0,1

Camera Link Clock:

High Speed: 50 MHz

High Speed LongCable: 42.5 MHz

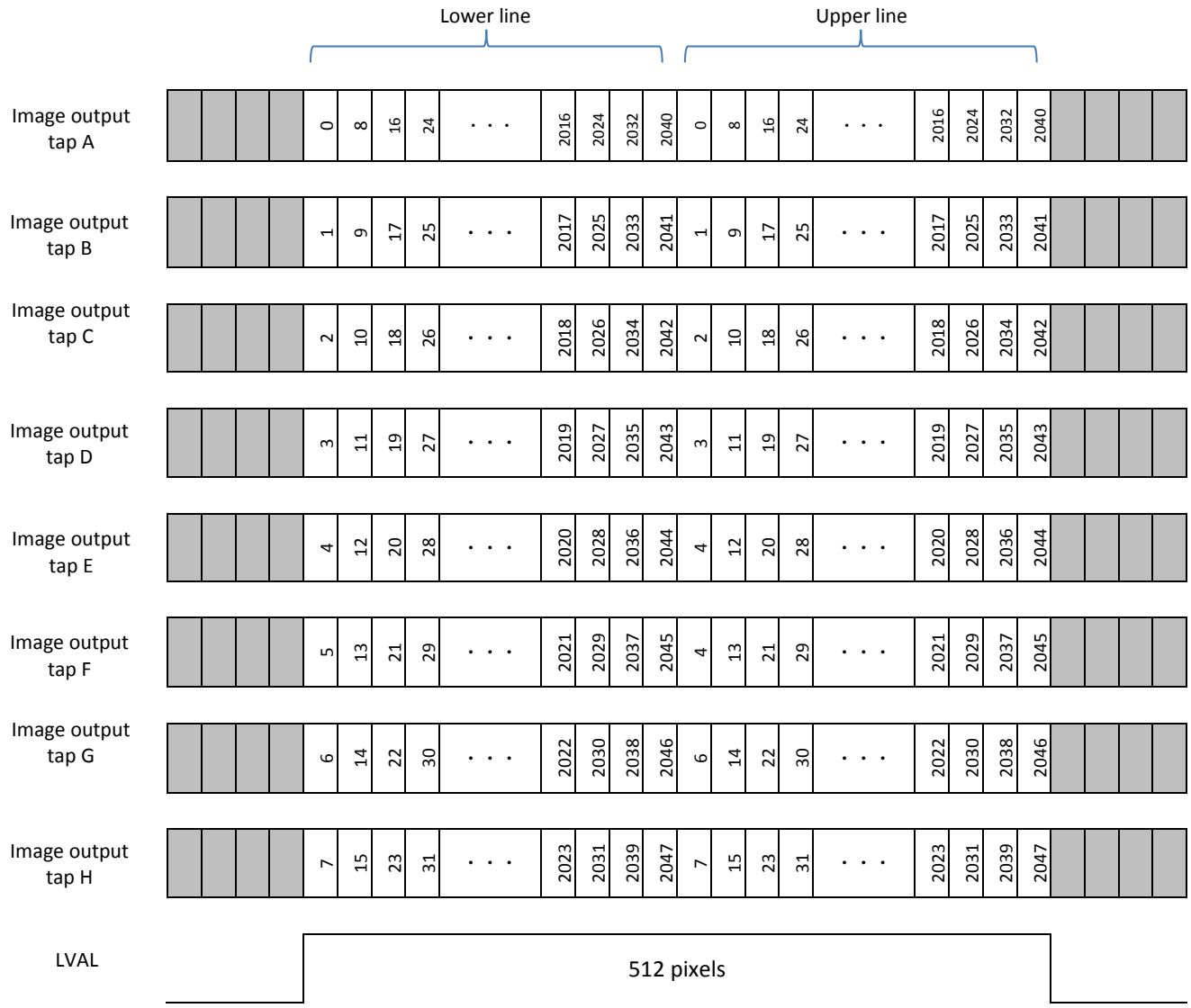

4.1.3 Video Output Format Timing Chart (H bin Single Cable Mode)

EEh = 2

Camera Link Clock: 85 MHz

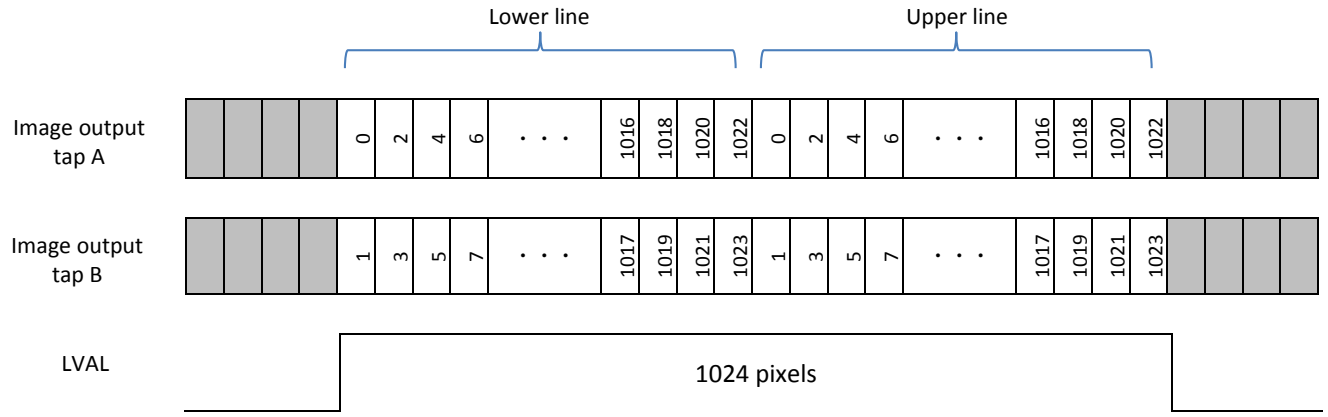

* As per Camera Link Specifications.

12bit: Base Configuration 12-bit x 2
10bit: Base Configuration 10-bit x 2
8bit: Base Configuration 8-bit x 2

4.1.4 Video Output Format Timing Chart (H bin Long Cable Mode)

EEh = 3

Camera Link Clock: 25 MHz

4.1.5 Video Output Format Timing Chart (V bin Long Single Cable / V bin Single Cable Mode)

EEh = 4,5

Camera Link Clock:

V bin LongSingleCable: 42.5 MHz

V bin SingleCable: 85 MHz

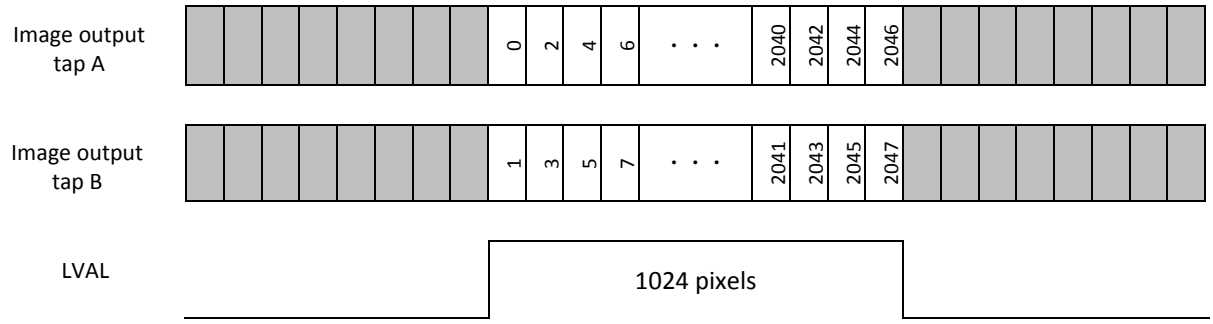

* As per Camera Link Specifications.

12bit: Base Configuration 12-bit x 2

10bit: Base Configuration 10-bit x 2

8bit: Base Configuration 8-bit x 2

4.1.6 Video Output Format Timing Chart (V bin Long Cable Mode)

EEh = 6

Camera Link Clock: 25 MHz

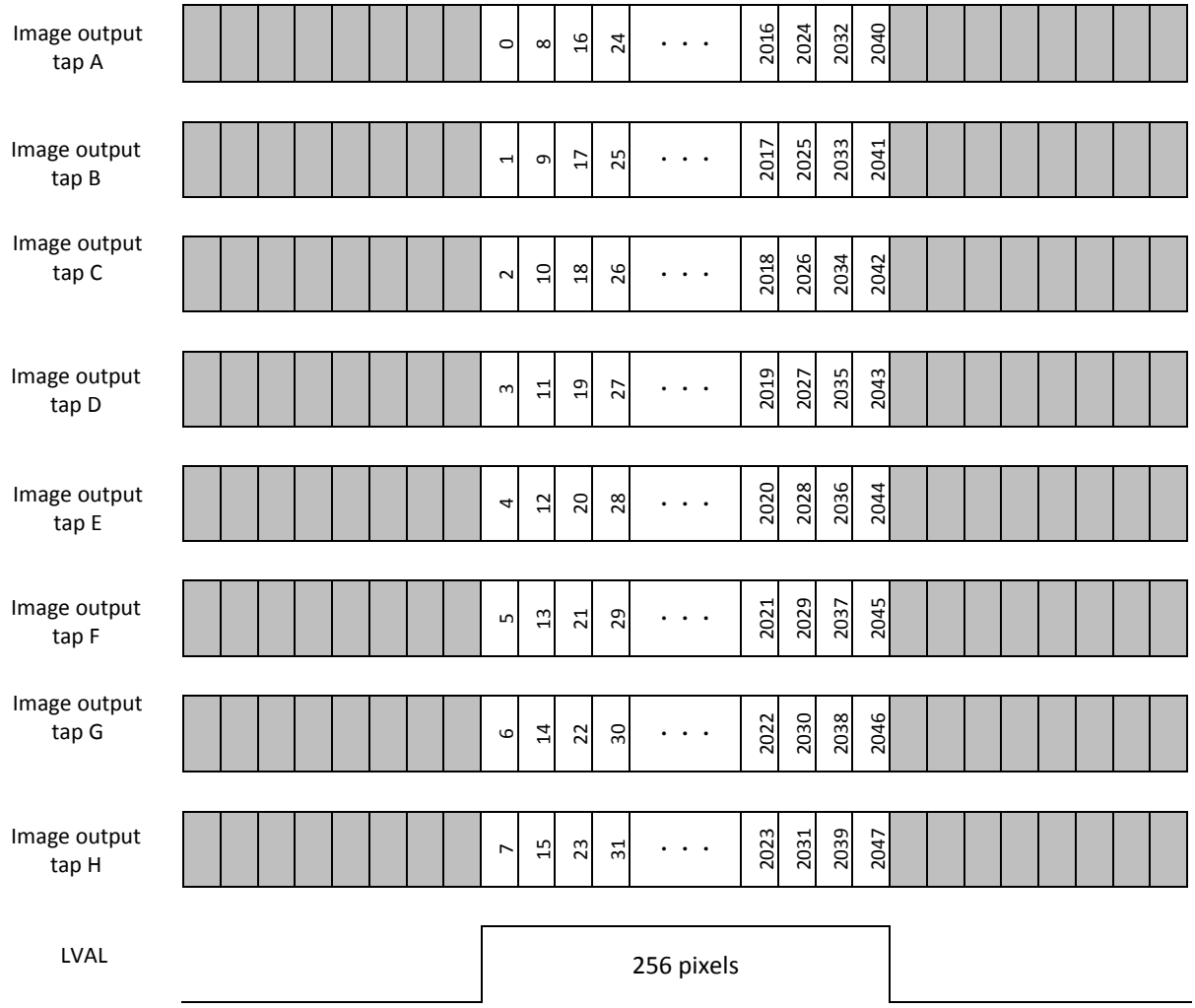

4.1.7 Video Output Format Timing Chart (HV bin Single Cable Mode)

EEh = 7

Camera Link Clock: 85 MHz

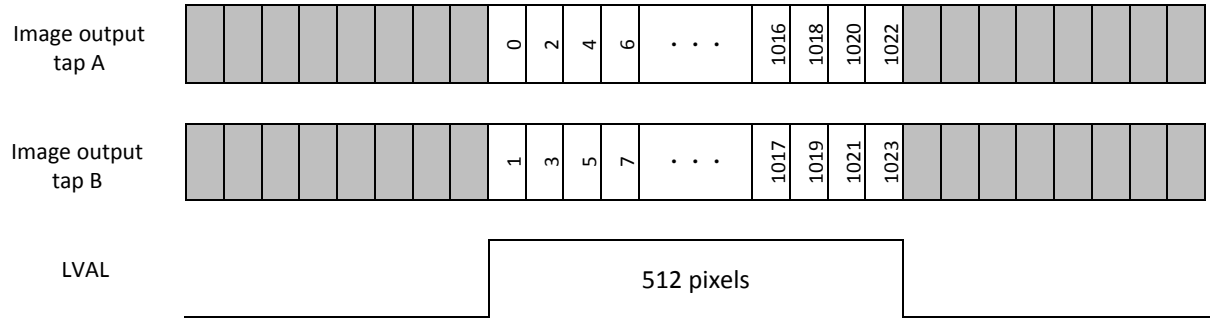

* As per Camera Link Specifications.

12bit: Base Configuration 12-bit x 2

10bit: Base Configuration 10-bit x 2

8bit: Base Configuration 8-bit x 2

4.1.8 Video Output Format Timing Chart (HV bin Long Cable Mode)

EEh = 8

Camera Link Clock: 25 MHz

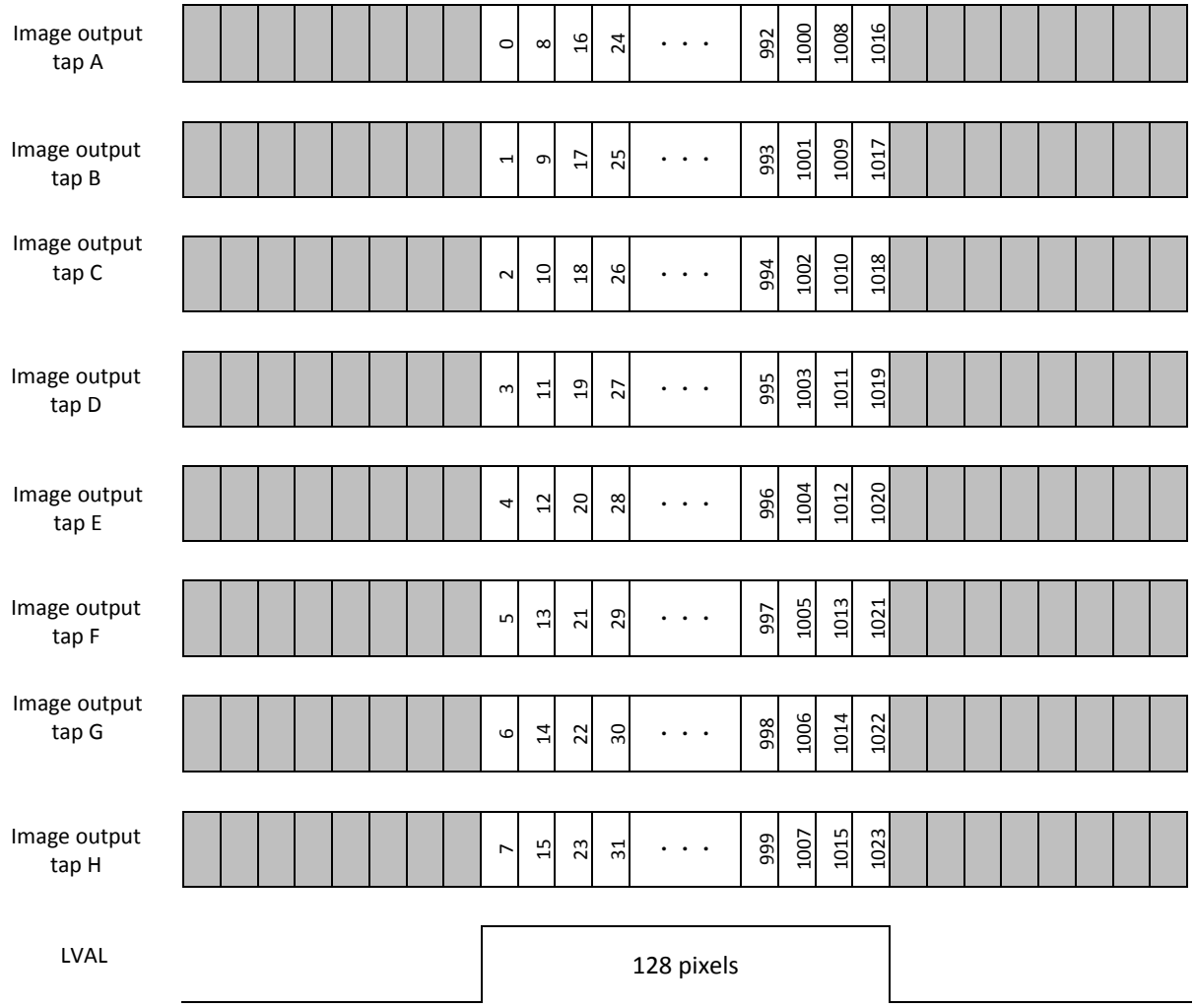

4.1.9 Video Output format Timing Chart (HV Bin Single Cable AOI Mode)

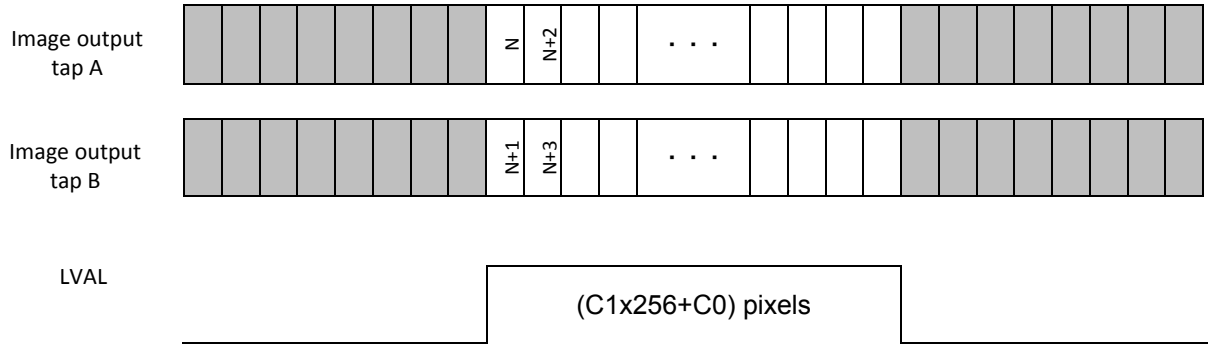

Model	AOI Start Pixel
FS-B2KU7DCLU	N= (B1h x 256 + B0h) x 2

* As per Camera Link specifications

12bit: Base Configuration 12-bit x 2
10bit: Base Configuration 10-bit x 2
8bit: Base Configuration 8-bit x 2

4.1.10 Video Output format Timing Charts (HV bin 4tap AOI Mode)

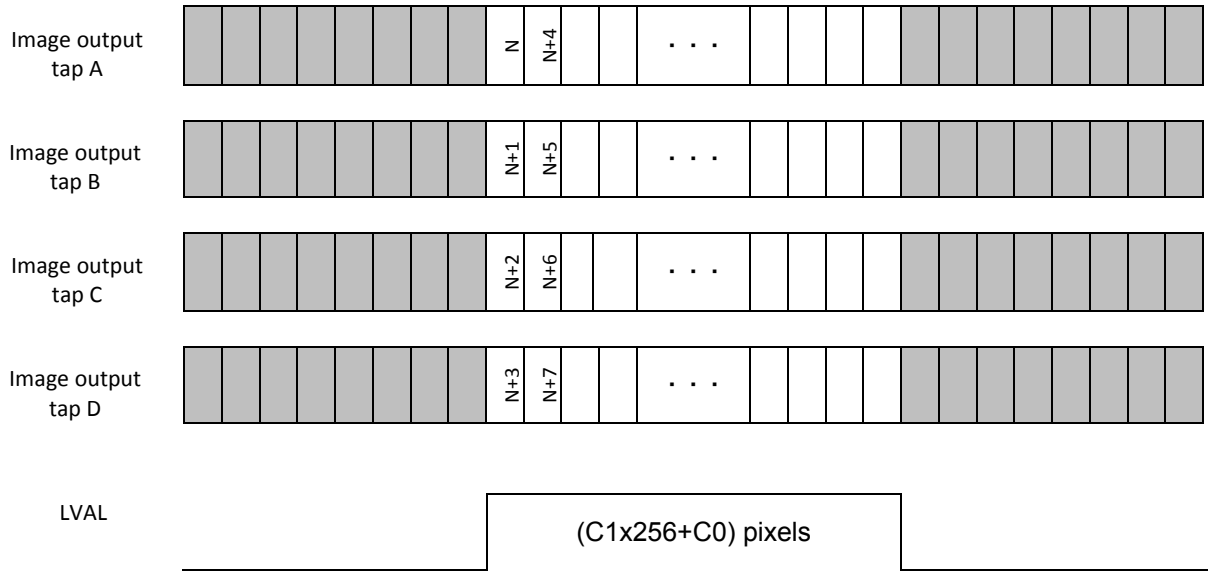

Model	AOI Start Pixel
FS-B2KU7DCLU	N= (B1h x 256 + B0h) x 4

* As per Camera Link Specifications.

12bit: Medium Configuration 12-bit x 2

10bit: Medium Configuration 10-bit x 2

8bit: Medium Configuration 8-bit x 2

4.1.11 Video Output format Timing Chart (HV bin 8tap AOI Mode)

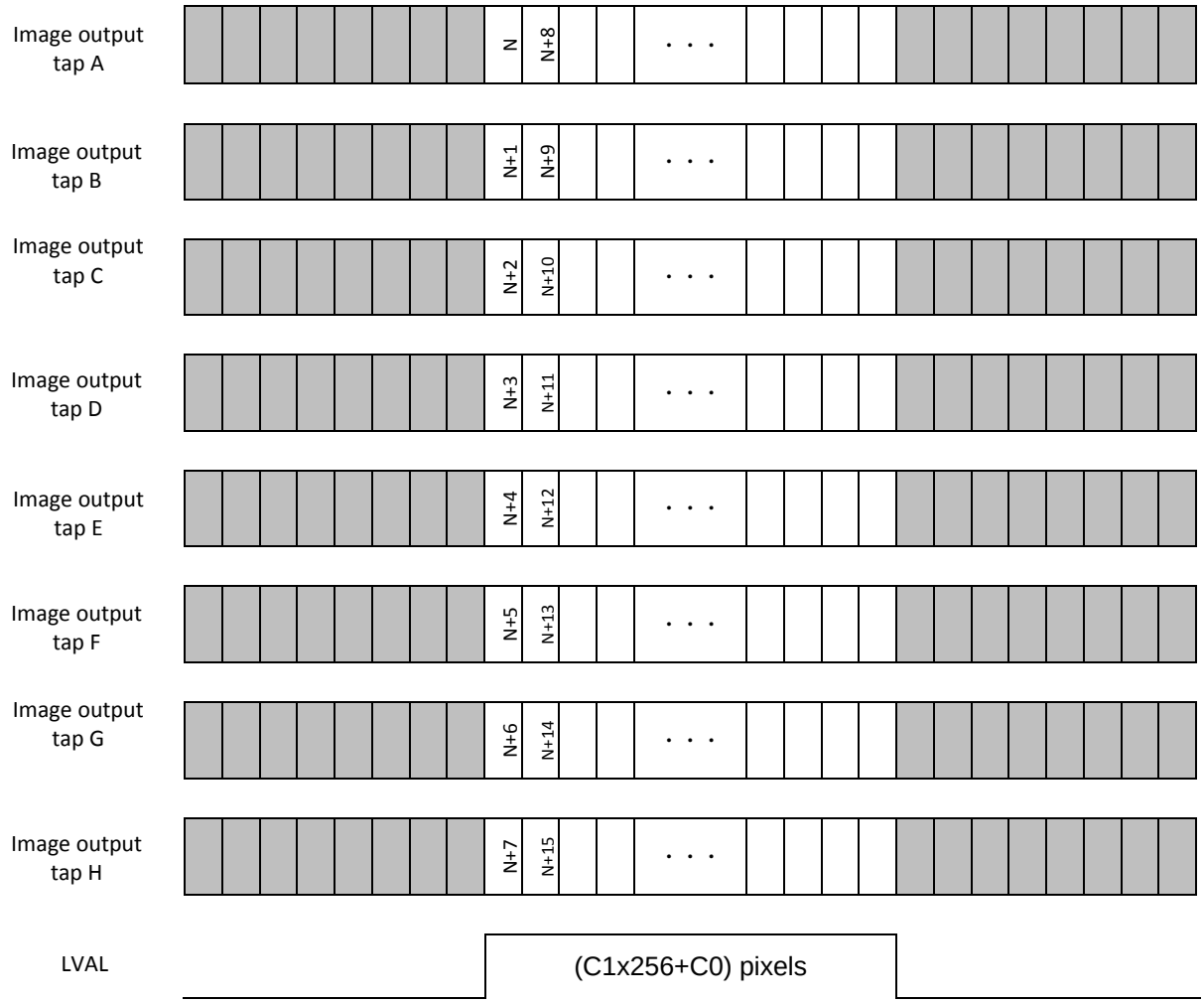

Model	AOI Start Pixel
FS-B2KU7DCLU	N= (B1h x 256 + B0h) x 8

4.2 FS-B4KU7DCLU

- Selectable output modes are listed in the table below.
- Video output format can be selected through register access.

EEh	Output mode	Data rate	Number of pixels	Maximum line rate	Output bit (12h.0-1)	Sensor mode	CL cable (*1)
1	High Speed	85MHz x 8tap	4096 x2	160kHz(*2)	8bit	9bit	5m x2
2	H bin	50MHz x 8tap	2048 x2	160kHz(*2)	8bit	9bit	5m x2
3	H bin Long cable	42.5MHz x 8tap	2048 x2	156kHz(*2)	8bit	9bit	10m x2
5	V bin	50MHz x 8tap	4096 x1	80kHz	8bit	9bit	5m x2
6	V bin Long cable	42.5MHz x 8tap	4096 x1	78kHz	8bit	9bit	10m x2
7	HV bin Single cable	85MHz x 2tap	2048 x1	80kHz	8/10bit	9bit	5m x1
8	HV bin Long cable	25MHz x 8tap	2048 x1	80kHz	8bit	9bit	10m x2
70	HV bin Single cable(AOI)	80MHz x 2tap	2048 x1	75kHz	8/10bit	9bit	5m x1
71	HV bin Single cable(AOI)	40MHz x 2tap	2048 x1	37kHz	8/10bit	9bit	10m x1
72	HV bin 4tap (AOI)	80MHz x 4tap	2048 x1	80kHz	8/10bit	9bit	5m x1
73	HV bin 4tap (AOI)	40MHz x 4tap	2048 x1	73kHz	8/10bit	9bit	10m x1
74	HV bin 8tap (AOI)	80MHz x 8tap	2048 x1	80kHz	8/10bit	9bit	5m x2
75	HV bin 8tap (AOI)	40MHz x 8tap	2048 x1	80kHz	8/10bit	9bit	10m x2
90	High Speed	85MHz x 8tap	4096 x2	160kHz(*2)	8bit	12bit	5m x2
91	High Speed	40MHz x 8tap	4096 x2	74kHz(*2)	8bit	12bit	10m x2
92	H bin	50MHz x 8tap	2048 x2	160kHz(*2)	8bit	12bit	5m x2
93	H bin Long cable	40MHz x 8tap	2048 x2	146kHz(*2)	8bit	12bit	10m x2
94	H bin Long cable	42.5MHz x 8tap	2048 x2	156kHz(*2)	8bit	12bit	10m x2
95	V bin	50MHz x 8tap	4096 x1	80kHz	8bit	12bit	5m x2
96	V bin Long cable	42.5MHz x 8tap	4096 x1	78kHz	8bit	12bit	10m x2
97	V bin Long cable	40MHz x 8tap	4096 x1	73kHz	8bit	12bit	10m x2
98	HV bin Single cable	85MHz x 2tap	2048 x1	80kHz	8/10/12bit	12bit	10m x1
99	HV bin Single cable	40MHz x 2tap	2048 x1	37kHz	8/10bit/12bit	12bit	10m x1
100	HV bin Long cable	40MHz x 8tap	2048 x1	80kHz	8bit	12bit	10m x2
101	HV bin Long cable	25MHz x 8tap	2048 x1	80kHz	8bit	12bit	10m x2
102	HV bin Single cable(AOI)	80MHz x 2tap	2048 x1	75kHz	8/10/12bit	12bit	5m x1
103	HV bin Single cable(AOI)	40MHz x 2tap	2048 x1	37kHz	8/10/12bit	12bit	10m x1
104	HV bin 4tap (AOI)	80MHz x 4tap	2048 x1	80kHz	8/10/12bit	12bit	5m x2
105	HV bin 4tap (AOI)	40MHz x 4tap	2048 x1	73kHz	8/10/12bit	12bit	10m x2
106	HV bin 8tap (AOI)	80MHz x 8tap	2048 x1	80kHz	8/10/12bit	12bit	5m x2
107	HV bin 8tap (AOI)	40MHz x 8tap	2048 x1	80kHz	8/10/12bit	12bit	10m x2
108	High Speed 4tap	85MHz x 4tap	4096 x2	80kHz(*2)	8/10/12bit	12bit	5m x2
109	High Speed 4tap	80MHz x 4tap	4096 x2	76kHz(*2)	8/10/12bit	12bit	5m x2
110	High Speed 4tap	40MHz x 4tap	4096 x2	38kHz(*2)	8/10/12bit	12bit	10m x2
111	High Speed 2tap	85MHz x 2tap	4096 x2	40kHz(*2)	8/10/12bit	12bit	5m x2
112	High Speed 2tap	80MHz x 2tap	4096 x2	38kHz(*2)	8/10/12bit	12bit	5m x2
113	High Speed 2tap	40MHz x 2tap	4096 x2	18kHz(*2)	8/10/12bit	12bit	10m x2

*1 Reference of Camera Link cable length.
(Cable quality depends on the user's choice, this value should be a reference value)
*2 The line rate is calculated twice as fast since two lines are output in one scan.

[Technical Terminology]
H bin: H-Binning Mode
V bin: V-Binning Mode
HV bin: HV-Binning Mode
Long Cable: The camera is capable of using a 10m Camera Link cable.
Single Cable: The camera is capable of using a single Camera Link cable.
LongSingle Cable: The camera is capable of using a single 10m Camera Link cable.

For further information about the Binning function, please refer to the Chapter 6.1: Binning

4.2.1 Line Definition

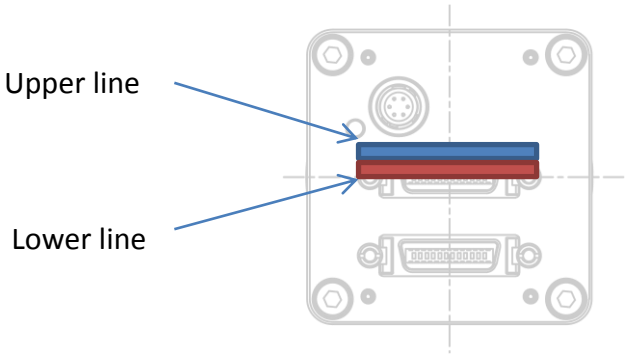

4.2.2 Video Output Format Timing Chart (High Speed Mode 8tap)

4.2.3 Video Output format Timing Chart (High Speed Mode 4tap)

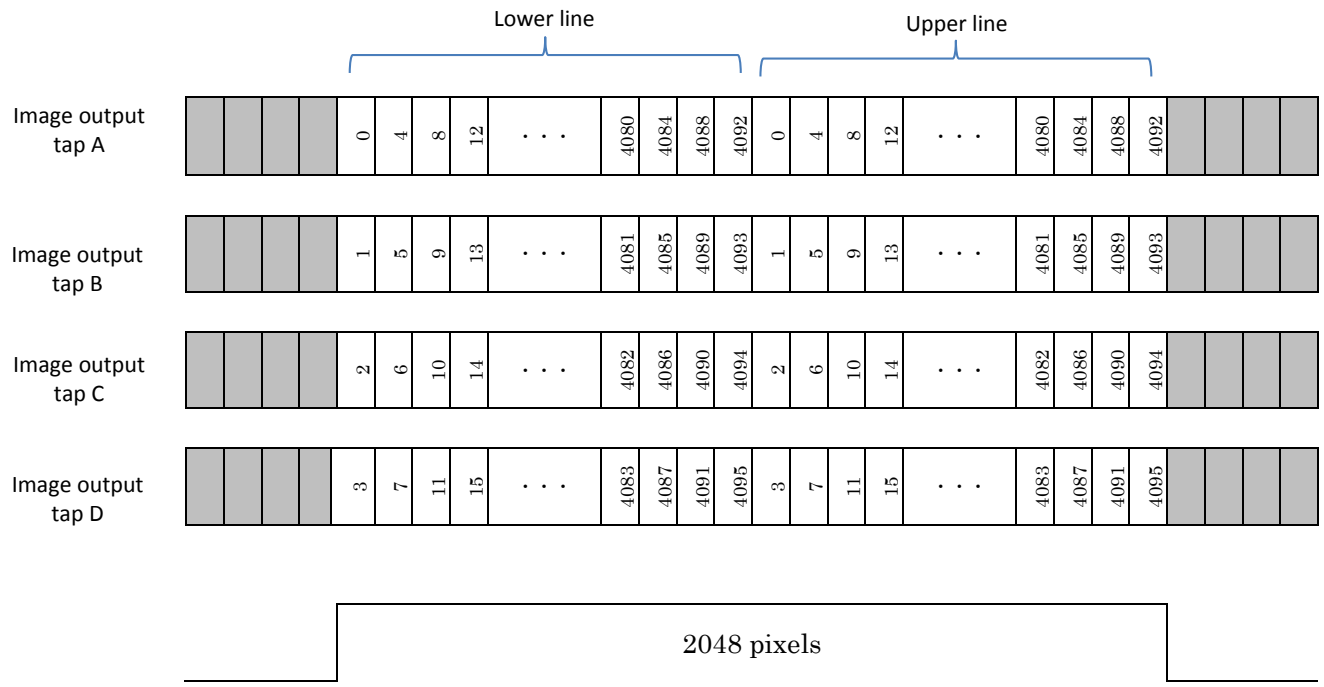

4.2.4 Video Output format Timing Chart (High Speed Mode 2tap)

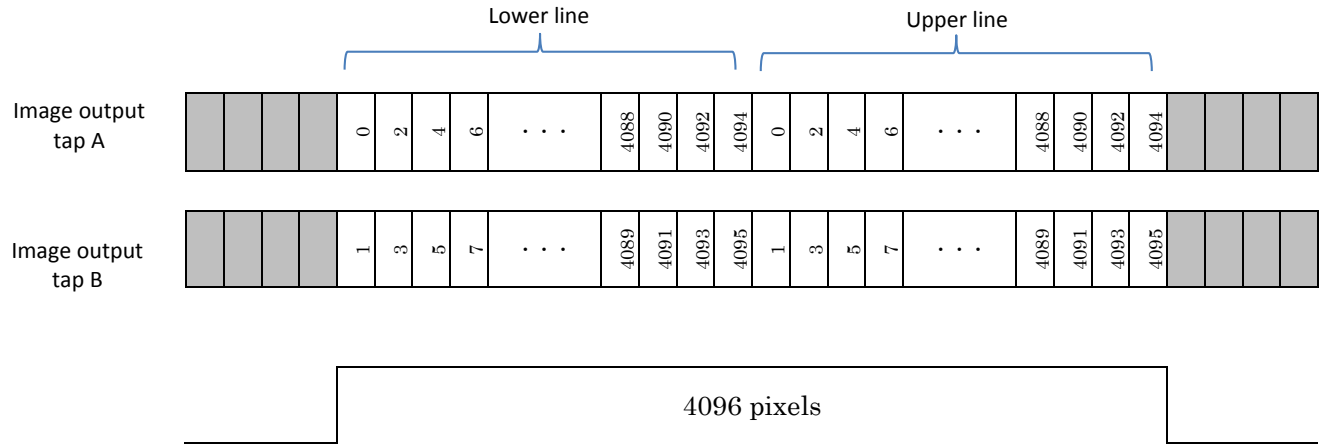

4.2.5 Video Output Format Timing Chart (H bin Mode)

EEh = 2

Camera Link Clock:

H bin: 50 MHz

H bin LongCable: 42.5 MHz

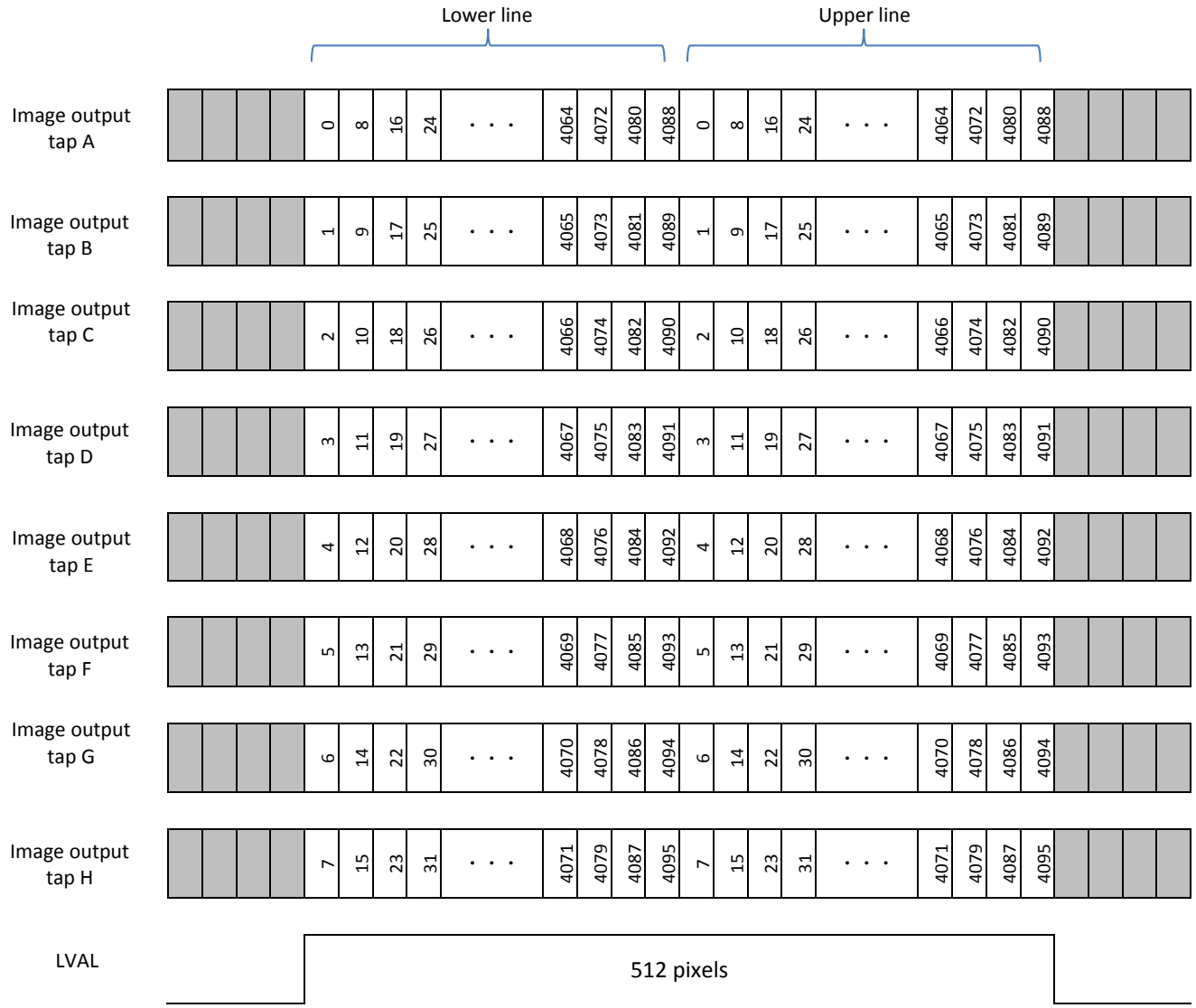

4.2.6 Video Output Format Timing Chart (V bin Mode)

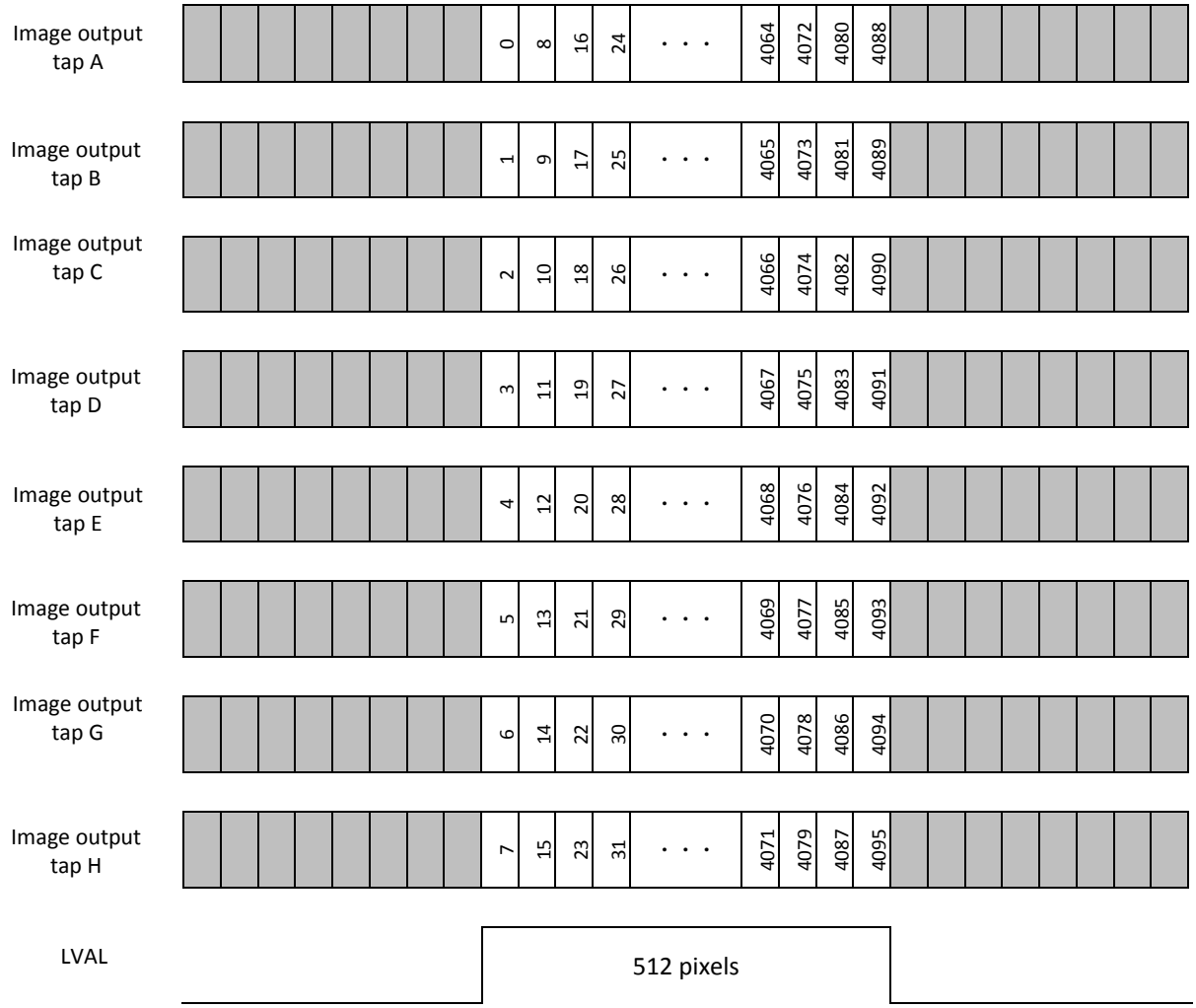

4.2.7 Video Output Format Timing Chart (HV bin Single Cable Mode)

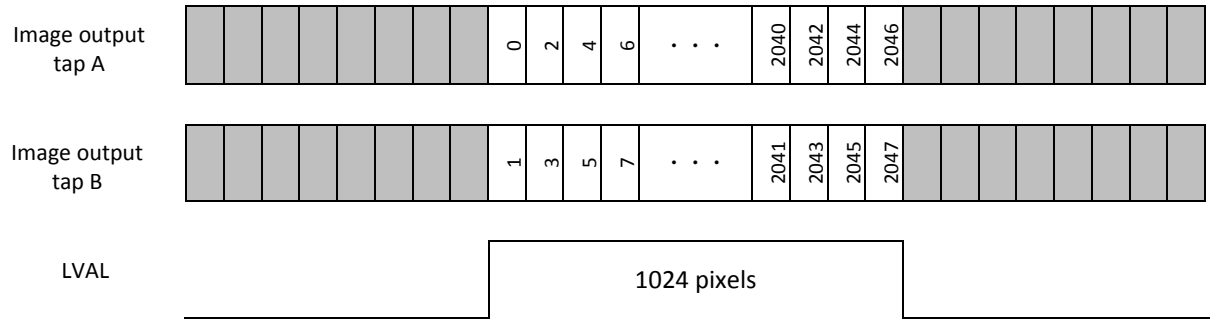

* As per Camera Link Specifications.

12bit: Base Configuration 12-bit x 2
10bit: Base Configuration 10-bit x 2
8bit: Base Configuration 8-bit x 2

4.2.8 Video Output Format Timing Chart (HV bin Long Cable Mode)

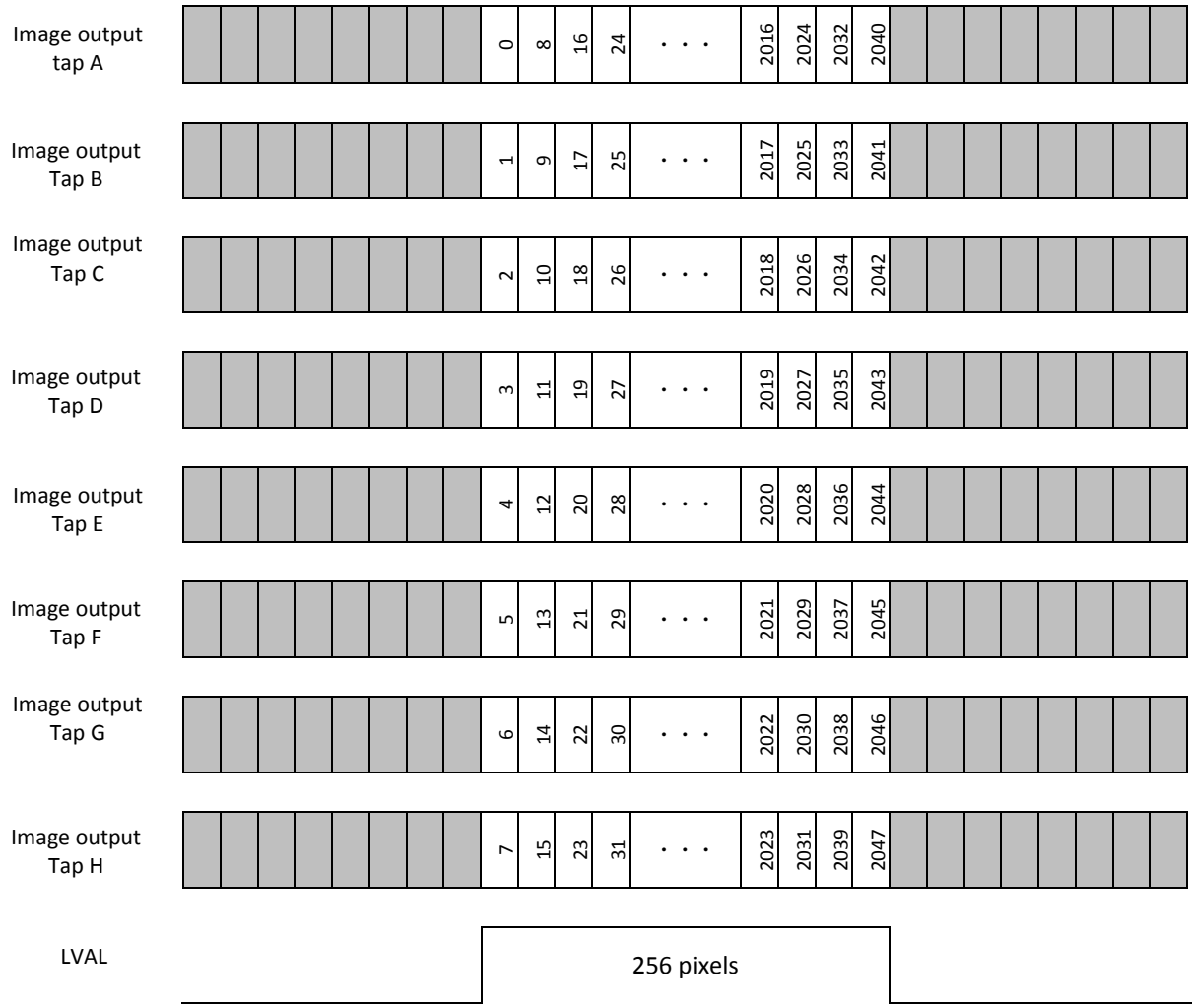

4.2.9 Video Output format Timing Chart (HV bin Single Cable AOI Mode)

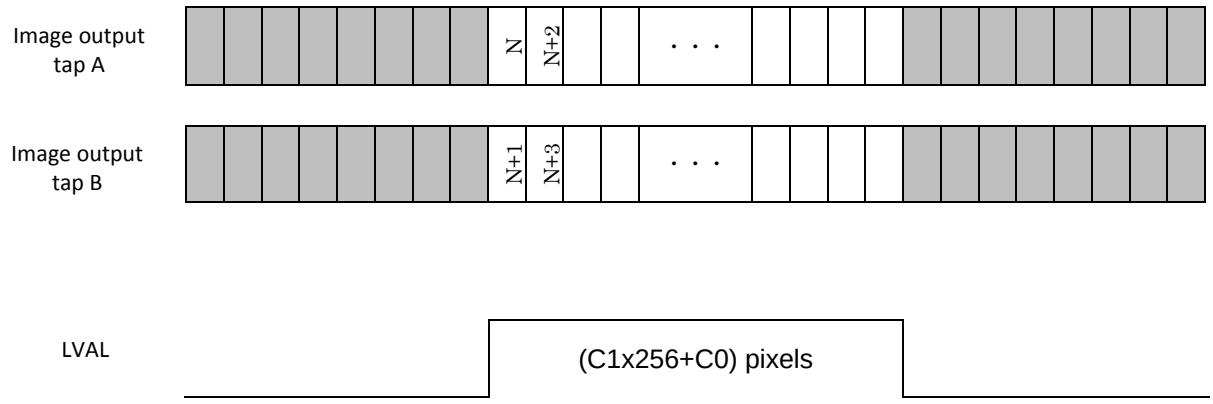

Model	AOI Start Pixel
FS-B4KU7DCLU	N= (B1h x 256 + B0h) x 2

* As per Camera Link Specifications.

12bit: Medium Configuration 12-bit x 2
10bit: Medium Configuration 10-bit x 2
8bit: Medium Configuration 8-bit x 2

4.2.10 Video Output format Timing Chart (HV bin 4tap AOI Mode)

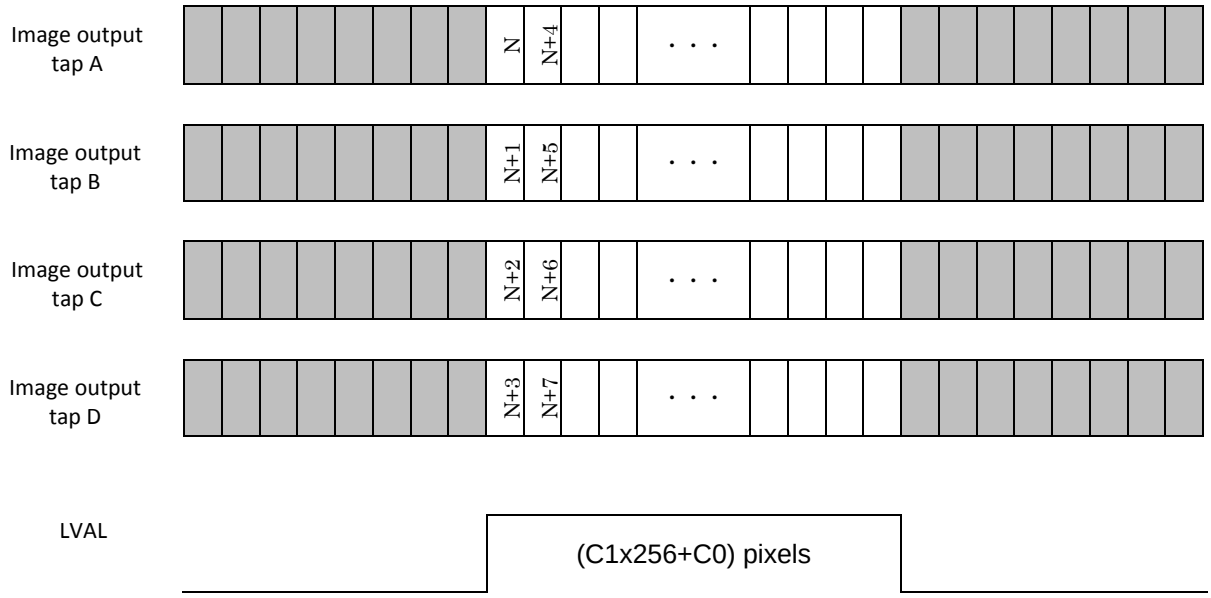

Model	AOI Start Pixel
FS-B4KU7DCLU	N= (B1h x 256 + B0h) x 4

* As per Camera Link Specifications.

12bit: Medium Configuration 12-bit x 2
10bit: Medium Configuration 10-bit x 2
8bit: Medium Configuration 8-bit x 2

4.2.11 Video Output format Timing Chart (HV bin 8tap AOI Mode)

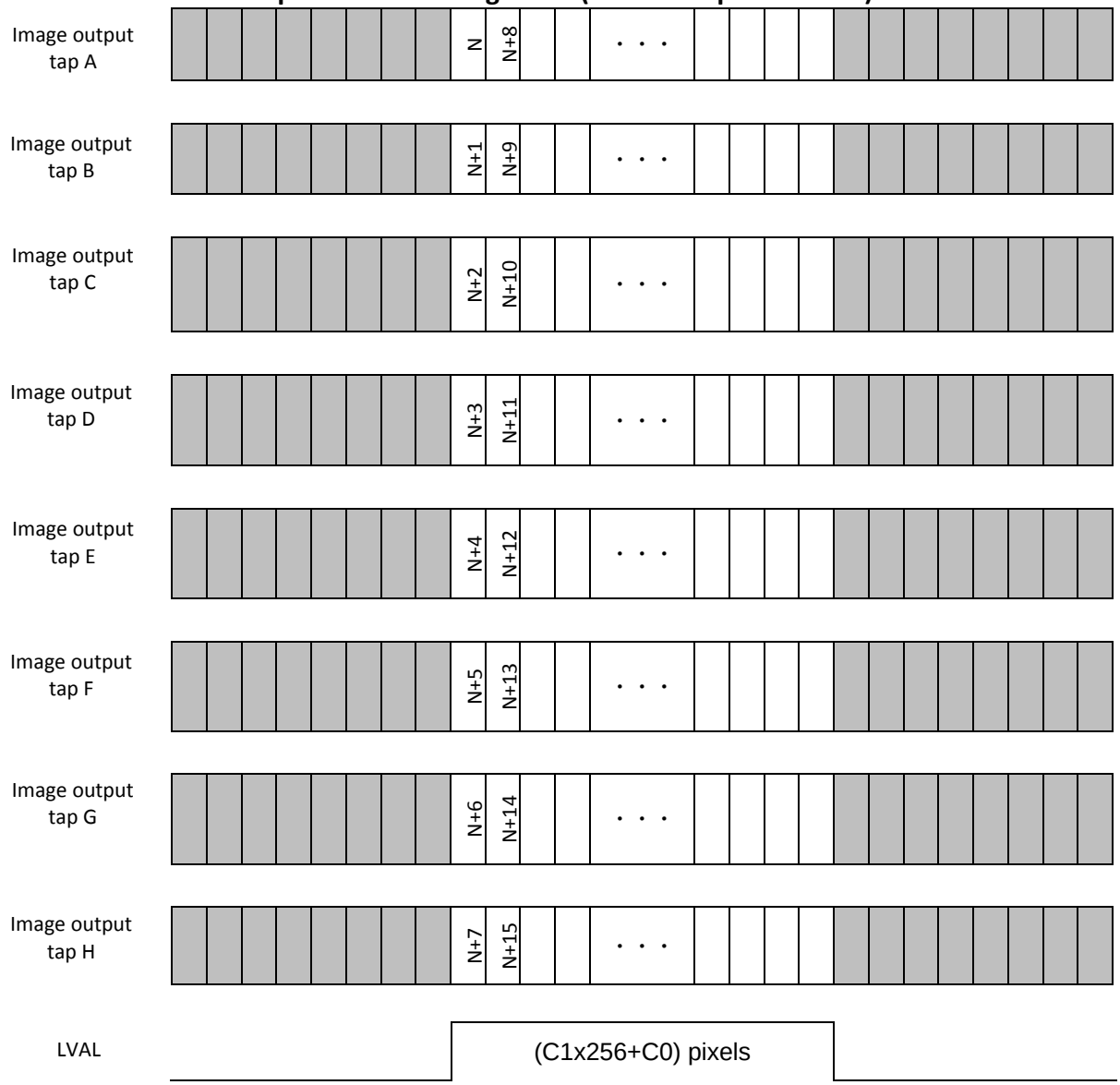

Model	AOI Start Pixel
FS-B4KU7DCLU	N= (B1h x 256 + B0h) x 8

4.3 FS-B8KU7DCLU

- Selectable output modes are listed in the table below.
- Video output format can be selected through the register access.

EEh	Output mode	Data rate	Number of pixels	Maximum line rate	Output bit (12h.0-1)	Sensor mode	CL cable (*1)
1	High Speed	85MHz x 8tap	8192 x2	80kHz(*2)	8bit	9bit	5m x2
2	H bin	50MHz x 8tap	4096 x2	80kHz(*2)	8bit	9bit	5m x2
3	H bin Long cable	42.5MHz x 8tap	4096 x2	80kHz(*2)	8bit	9bit	10m x2
5	V bin	50MHz x 8tap	8192 x1	40kHz	8bit	9bit	5m x2
6	V bin Long cable	42.5MHz x 8tap	8192 x1	40kHz	8bit	9bit	10m x2
7	HV bin Single cable	85MHz x 2tap	4096 x1	40kHz	8/10bit	9bit	5m x1
8	HV bin Long cable	25MHz x 8tap	4096 x1	40kHz	8bit	9bit	10m x2
70	HV bin Single cable(AOI)	80MHz x 2tap	N x1	38kHz	8/10bit	9bit	5m x1
71	HV bin Single cable(AOI)	40MHz x 2tap	N x1	18kHz	8/10bit	9bit	10m x1
72	HV bin 4tap (AOI)	80MHz x 4tap	N x1	40kHz	8/10bit	9bit	5m x2
73	HV bin 4tap (AOI)	40MHz x 4tap	N x1	37kHz	8/10bit	9bit	10m x2
74	HV bin 8tap (AOI)	80MHz x 8tap	4096 x1	40kHz	8bit	9bit	5m x2
75	HV bin 8tap (AOI)	40MHz x 8tap	4096 x1	40kHz	8bit	9bit	10m x2
90	High Speed	85MHz x 8tap	8192 x2	80kHz(*2)	8bit	12bit	5m x2
91	High Speed	40MHz x 8tap	8192 x2	38kHz(*2)	8bit	12bit	10m x2
92	H bin	50MHz x 8tap	4096 x2	80kHz(*2)	8bit	12bit	5m x2
93	H bin Long cable	42.5MHz x 8tap	4096 x2	80kHz(*2)	8bit	12bit	10m x2
94	H bin Long cable	40MHz x 8tap	4096 x2	74kHz(*2)	8bit	12bit	10m x2
95	V bin	50MHz x 8tap	8192 x1	40kHz	8bit	12bit	5m x2
96	V bin Long cable	42.5MHz x 8tap	8192 x1	40kHz	8bit	12bit	10m x2
97	V bin Long cable	40MHz x 8tap	8192 x1	37kHz	8bit	12bit	10m x2
98	HV bin Single cable	85MHz x 2tap	4096 x1	40kHz	8/10/12bit	12bit	5m x1
99	HV bin Single cable	40MHz x 2tap	4096 x1	19kHz	8/10/12bit	12bit	10m x1
100	HV bin Long cable	40MHz x 8tap	4096 x1	40kHz	8bit	12bit	10m x2
101	HV bin Long cable	25MHz x 8tap	4096 x1	40kHz	8bit	12bit	10m x2
102	HV bin Single cable(AOI)	80MHz x 2tap	N x1	38kHz	8/10/12bit	12bit	5m x1
103	HV bin Single cable(AOI)	40MHz x 2tap	N x1	18kHz	8/10/12bit	12bit	10m x1
104	HV bin 4tap (AOI)	80MHz x 4tap	N x1	40kHz	8/10/12bit	12bit	5m x2
105	HV bin 4tap (AOI)	40MHz x 4tap	N x1	37kHz	8/10/12bit	12bit	10m x2
106	HV bin 8tap (AOI)	80MHz x 8tap	N x1	40kHz	8bit	12bit	5m x2
107	HV bin 8tap (AOI)	40MHz x 8tap	N x1	40kHz	8bit	12bit	10m x2

*1 Reference of Camera Link cable length.
(Cable quality depends on the user's choice, this value should be a reference value)
*2 The line rate is calculated twice as fast since two lines are output in one scan.

[Technical Terminology]
H bin: H-Binning Mode
V bin: V-Binning Mode
HV bin: HV-Binning Mode
Long Cable: The camera is capable of using a 10m Camera Link cable.
Single Cable: The camera is capable of using a single Camera Link cable.
LongSingle Cable: The camera is capable of using a single 10m Camera Link cable.

For further information on the Binning function, please refer to the Chapter 6.1: Binning

4.3.1 Line Definition

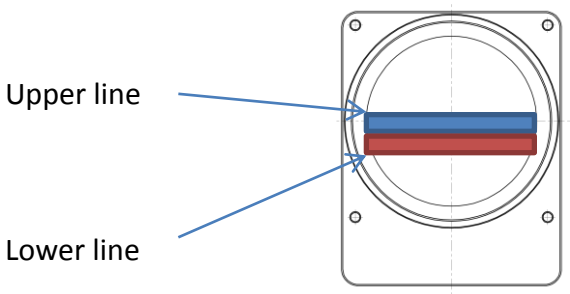

4.3.2 Video Output Format Timing Chart (High Speed Mode)

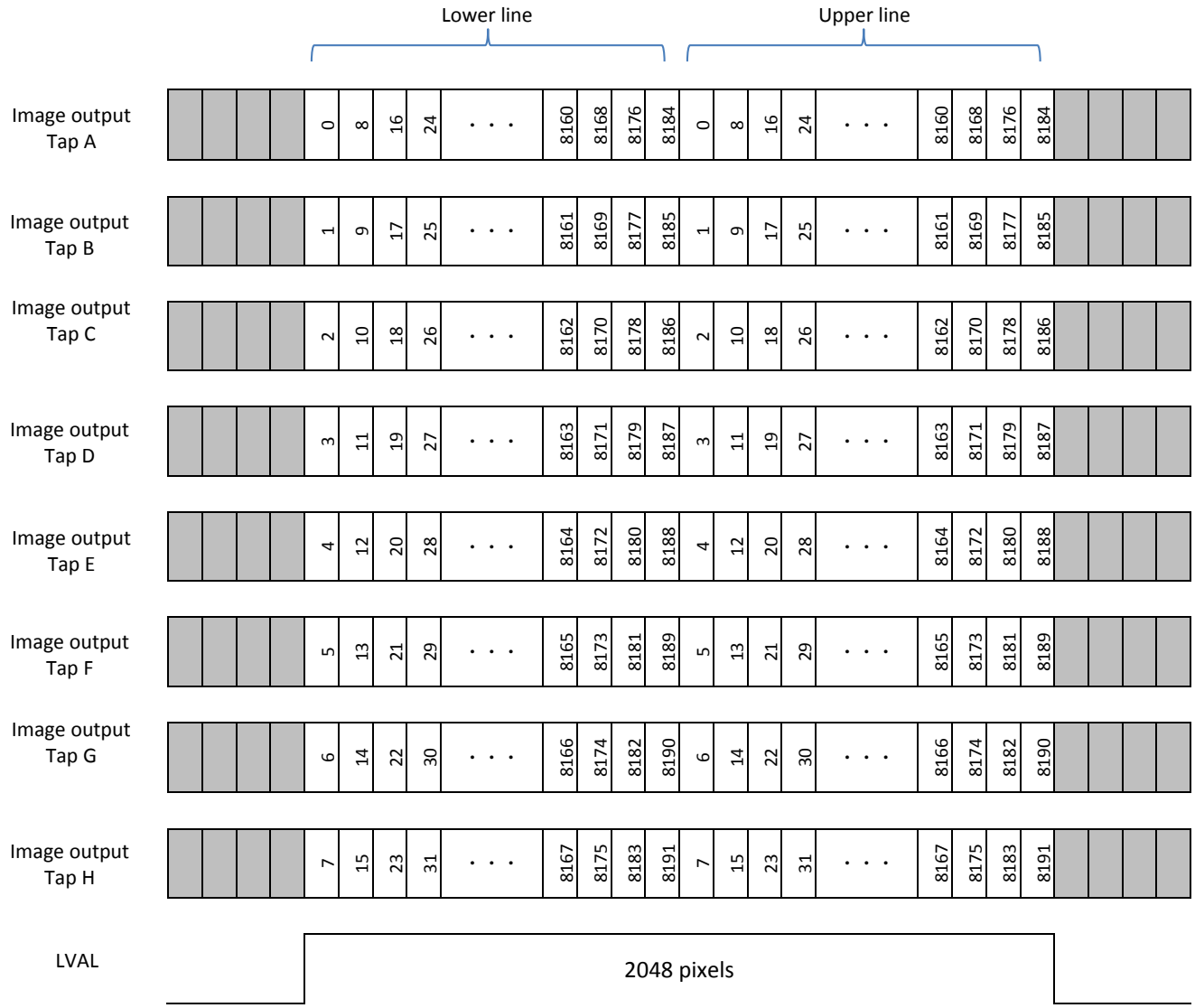

4.3.3 Video Output Format Timing Chart (H bin Mode)

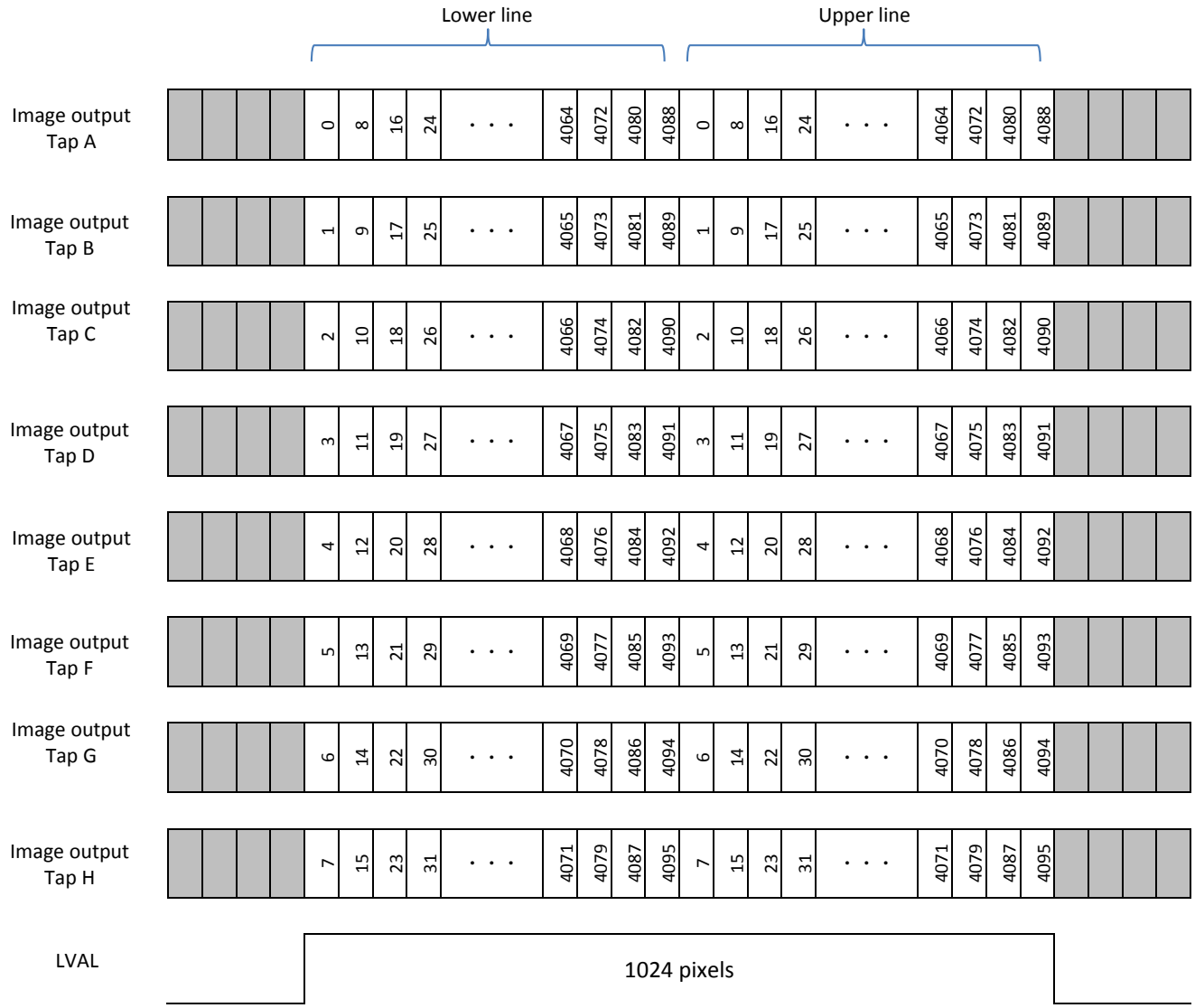

4.3.4 Video Output Format Timing Chart (V bin Mode)

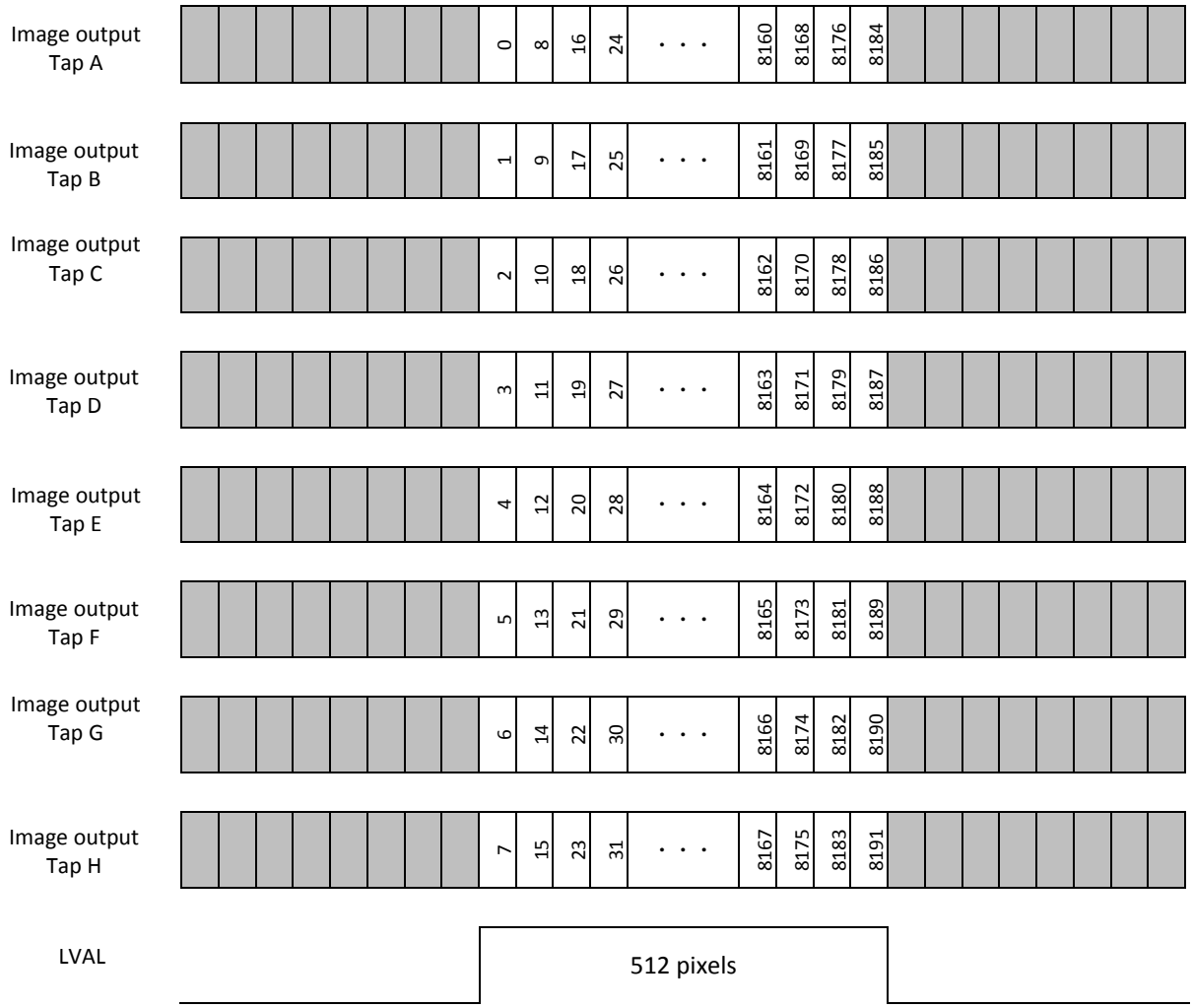

4.3.5 Video Output Format Timing Chart (HV bin Single Cable Mode)

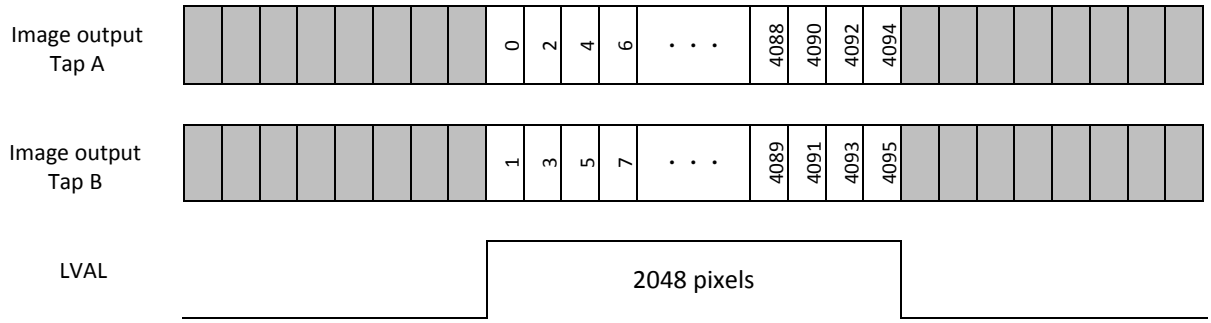

* As per Camera Link Specifications.

12bit: Base Configuration 12-bit x 2
10bit: Base Configuration 10-bit x 2
8bit: Base Configuration 8-bit x 2

4.3.6 Video Output Format Timing Chart (HV bin Long Cable Mode)

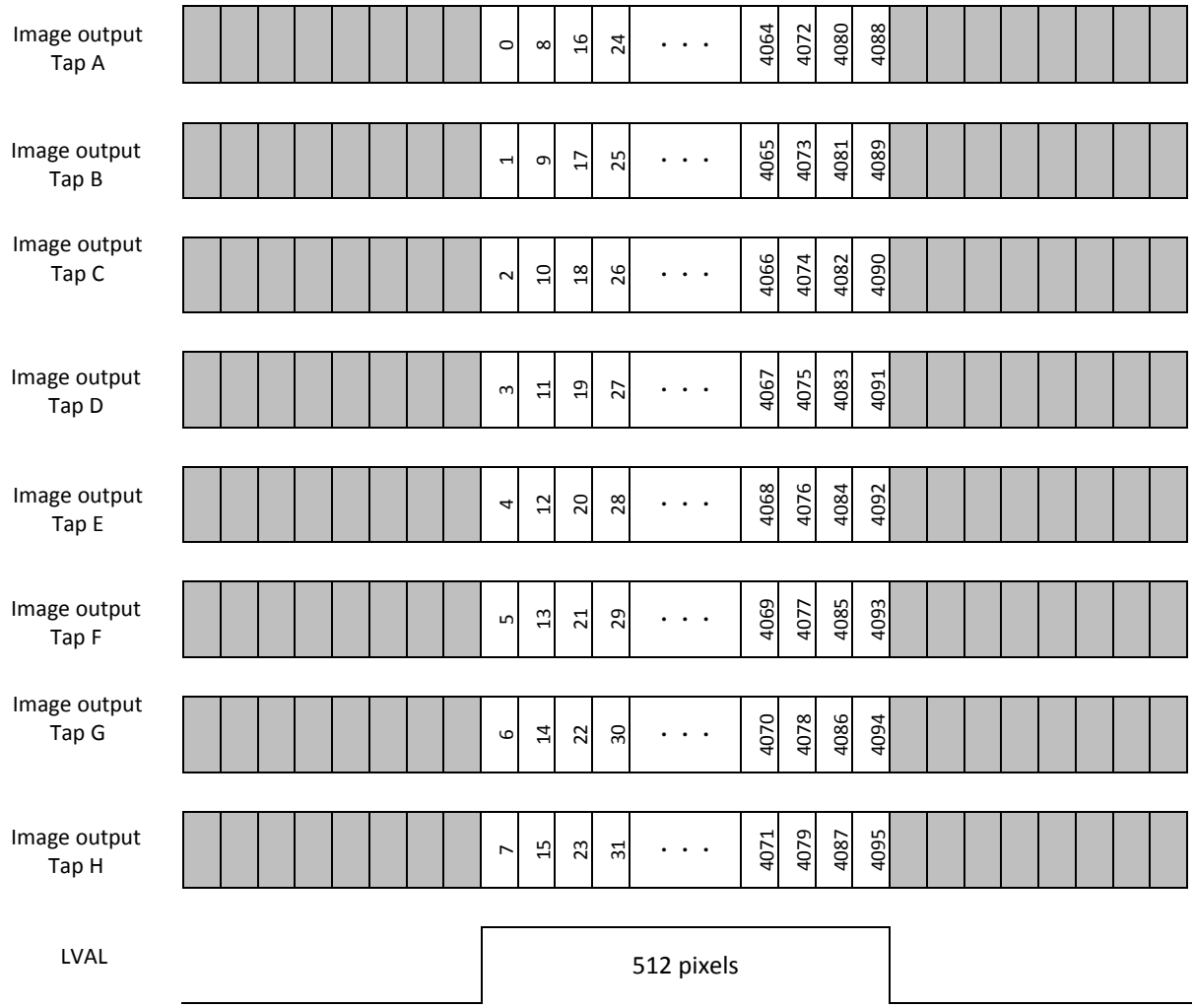

4.3.7 Video Output format Timing Chart (HV bin Single cable AOI Mode)

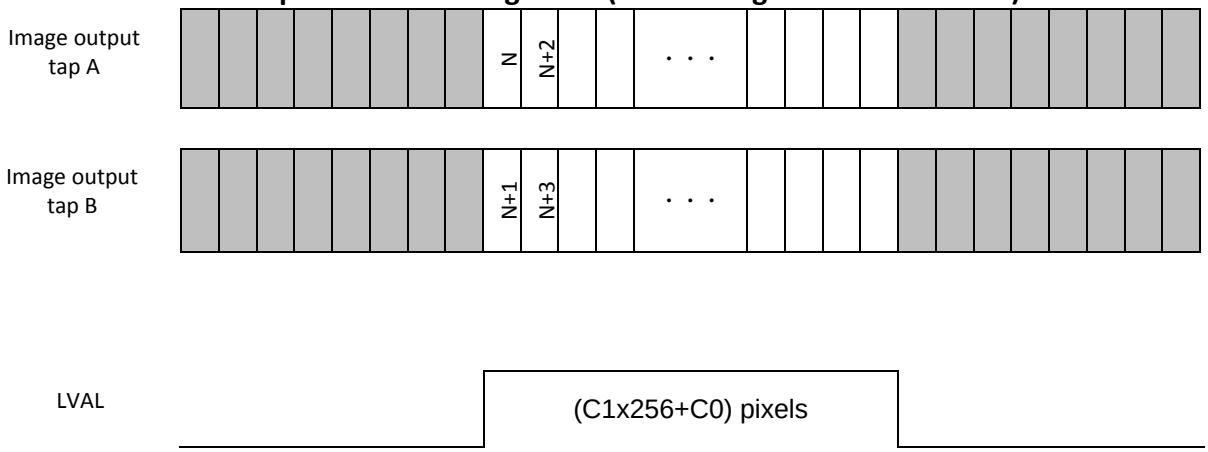

Model	AOI Start Pixel
FS-B8KU7DCLU	N= (B1h x 256 + B0h) x 2

* As per Camera Link Specifications.

12bit: Base Configuration 12-bit x 2
10bit: Base Configuration 10-bit x 2
8bit: Base Configuration 8-bit x 2

4.3.8 Video Output format Timing Chart (HV bin 4tap AOI mode)

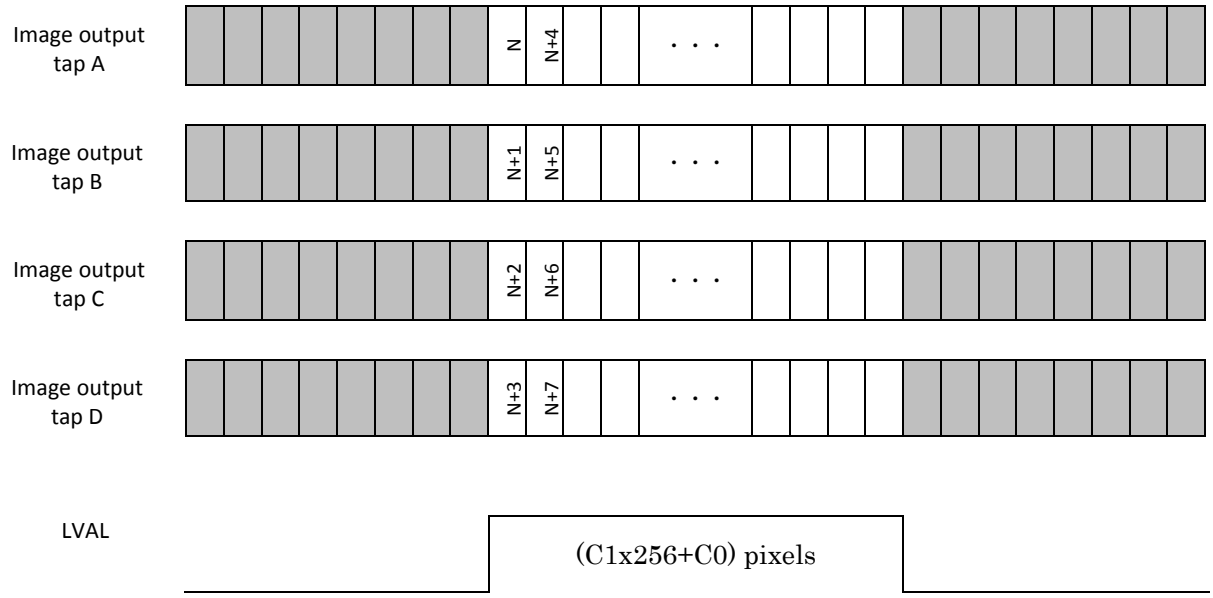

Model	AOI Start Pixel
FS-B8KU7DCLU	N= (B1h x 256 + B0h) x 2

* As per Camera Link Specifications.

12bit: Medium Configuration 12-bit x 2
10bit: Medium Configuration 10-bit x 2
8bit: Medium Configuration 8-bit x 2

4.3.9 Video Output format Timing Chart (HV bin8tap AOI mode)

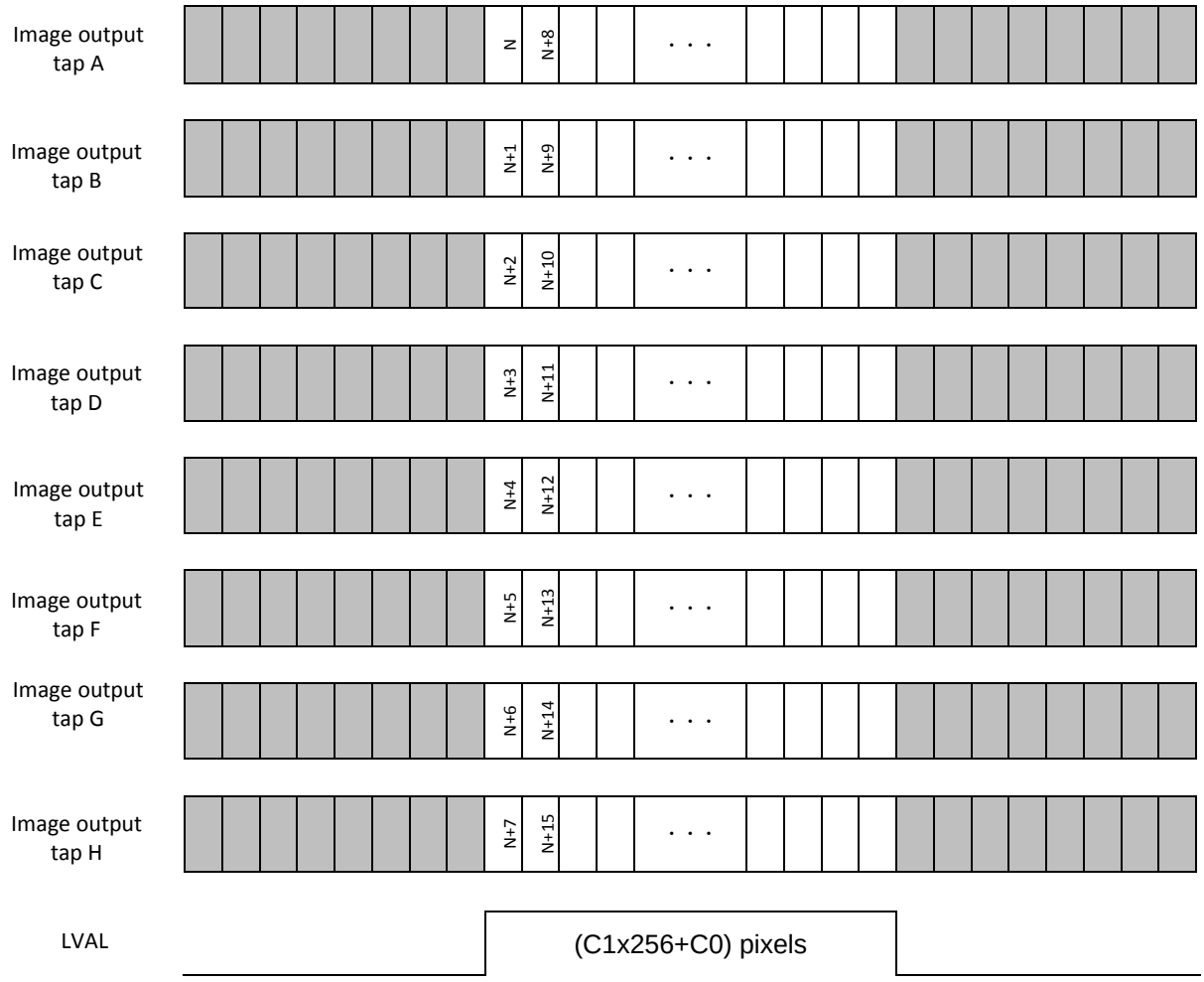

Model	AOI Start Pixel
FS-B8KU7DCLU	N= (B1h x 256 + B0h) x 8

5. The Communication Protocol Specifications

This camera has a communication function that enables external devices, such as a PC, to control the camera functions. Please use the Sentech provided “CLCtrl” communication software or the following communication protocol to communicate with the camera.

5.1 The Communication Method

UART (RS232C), Binary Communication

5.2 The Communication Settings

	Settings
Baud rate	9,600bps / 38,400bps /57,600bps / 115,200bps
Data bit	8bit
Parity	None
Stop bit	1bit
Flow control	None

5.2.1 The Communication Format

A. The format for sending data from the PC to the camera is as follows:

a. Sending the read command:

SOF (8bit)	Device code (6bit)	Read (1bit)	Page selection (1bit)	Command code (8bit)	Data length (8bit)	Data (1byte)	EOF (8bit)

b. Sending the write command:

SOF (8bit)	Device code (6bit)	Write (1bit)	Page selection (1bit)	Command code (8bit)	Data length (8bit)	Data (Data length byte)	EOF (8bit)

B. The format for receiving data from the camera is as follows:

a. After sending the read command:

SOF (8bit)	Data length (8bit)	Data (Data length byte)	EOF (8bit)

b. After sending the write command:

SOF (8bit)	Data length (8bit) "00"	Receiving code (8bit)	EOF (8bit)

C. Descriptions of the Format

Name	Descriptions
SOF	**S**tart **o**f the **f**rame
	Sets (or gets) the value as “02H” always.
Device code	Sets the device code of the camera as “000000”.
Read / Write	Sets (or gets) “0” when sending the read command.
	Sets (or gets) “1” when sending the write command.
Page selection	Sets “0” when access to the command register of the camera is established.
	Gets current data from the command register when the read command is sent.
	The data of the command register is replaced by the sent data when the write command is sent.
	The data of the EEPROM is not replaced.
	Sets “1” when access to the EEPROM of the camera is established.
	The camera works with the data of the EEPROM when the cmaera is powered on.
	Gets the data from the EEPROM when the read command is sent.
	The data of the EEPROM is replaced by sent data when the write command is sent.
	The camera sends the receiving coce as "01H" to the PC after the data of the EEPROM is replaced.
	The camera rejects other commands while the data of the EEPROM is being replaced
	(approximately 5 msec. / byte).
Command code	**Please refer to the following page.**
Data length	Data length (Unit: byte)
	Receiving data
	The data length depends on the command after the read command is sent.
	The data length is “00H” after the write command is sent.
	Sending data
	The data length is 1 byte when the read command is sent.
	The data length is depending on the command when the write command is sent.
Data	The value of the data is depending on the command
EOF	**E**nd **o**f the **f**rame
	Sets (or gets) the value as “03H” always
Receiving code	Result of the send command

D. Example Command

Send the read command to read the 00H address data of the register

02, 00, 00, 01, 00, 03

SOF, (Device code/Read/Register), Command Code, Data length, Data, EOF

The following command would be returned:

02, 01, 00, 03

5.3 The Camera Control Commands

5.3.1 The Camera Command List

(The underlined settings are the factory default settings)

<table>
<tr><th>Command No.
Bit No.</th><th colspan="2">Command Description</th></tr>
<tr><td>10h.0-1</td><td>【Exposure Mode】Initial Data:0
To set the exposure mode.
0:Line Exposure
1:Fix Exposure
2:Pulse Exposure
3:No function</td><td rowspan="2">There are 5 patterns through the combination of Exposure Mode and Sync Mode.
External Sync Line Exposure：
<table>
<tr><th colspan="2" rowspan="2"></th><th colspan="3">Sync Mode</th></tr>
<tr><th>1:External Sync</th><th>2:Internal Sync</th><th>3: Internal Sync (Exposure Control)</th></tr>
<tr><td rowspan="3">Exposure Mode</td><td>0: Line</td><td>External Sync Line Exposure</td><td rowspan="3">Internal Sync</td><td>Internal Sync Line Exposure</td></tr>
<tr><td>1: Fix</td><td>External Sync Fix Exposure</td><td>internal Sync Fix Exposure</td></tr>
<tr><td>2: Pulse</td><td>External Sync Pulse Exposure</td><td>Internal Sync Line Exposure</td></tr>
</table>
Exposure Time[us]:Line Cycle-(2+(12 X B))
External Sync Fix Exposure：
Exposure Time [us]: 20-21h X C+2
External Sync Pulse Exposure：
Exposure Time [us]:Pulse Width of CC1-1
Internal Sync Line Exposure：
Exposure Time [us]: (20-21h X C)+A-(2+12 X B)
Line Cycle [us]: (20-21h X C)+A
Internal Sync Fix Exposure：
Exposure Time [us]: 20-21h x C+2
Line Cycle [us]: (CE-CFh x C)+A
［Register］
20-21h: Exposure time setting value
CE-CFh: Line rate for Internal Sync Fix Mode

［Parameter］
A: Please refer to 7.1 “Minimum line period [us]”
B:CLK Cycle
<table>
<tr><th></th><th>[us]</th></tr>
<tr><td>FS-B8KU7DCLU</td><td>0.0235</td></tr>
<tr><td>FS-B4KU7DCLU,FS-B2KU7DCLU</td><td>0.0117</td></tr>
</table>
C:Step Time
<table>
<tr><th></th><th>[us]</th></tr>
<tr><td>FS-B8KU7DCLU</td><td>0.4</td></tr>
<tr><td>FS-B4KU7DCLU,FS-B2KU7DCLU</td><td>0.2</td></tr>
</table></td></tr>
<tr><td>11h.0-1</td><td>【Sync Mode】Initial Data:2
To set the camera sync.
0:No function
1:External Sync
2:Internal Sync
3: Internal Sync (Exposure Control)

After set this parameter, FFC should be set again for CMOS output character was changed.</td></tr>
</table>

Command No. Bit No.	Command Description
12h.0-1	【Video Out】Initial Data:0 To set the camera output bit. 0:8bit 1:10bit 2:12bit *Configurable output bit are depends on output mode. Some modes are 8bit only.
14h.0-1	【Serial Communication Baud Rate】Initial Data:3 To set the camera Communication Baud Rate. To reflect the setting, user has to turn OFF/ON the camera after setting was done. 0: 38,400bps 1: 9600bps 2: 57,600bps 3: 115,200bps
20-21h	【Exposure Time】Initial Data:0 To set the camera exposure time. 0～65535 *When sync control is Internal, Exposure Time becomes a Line period, so you can change the Line period of camera by this setting value of this parameter.
31h	【Digital Gain】Initial Data:0 To set the Digital Gain.(This process works after received the data from sensor). 0～255 Digital gain formula is the following. Gained Value =(1 + **Digital Gain** /64) x (Brightness Level - **FFC Offset Target**) + **FFC Offset Target** *This formula is based on FFC. This value is clamped by FFC Offset Target.
34h.0	【Analog Gain】Initial Data:0 To set the Analog Gain.(This process works on the CMOS's sensor registry). 0:OFF 1:ON（x 4） After set this parameter, FFC should be set again for CMOS output character was changed.
78h	【Test Pattern】Initial Data:0 To set the Test pattern output. 0:OFF 1:Sawtooth wave 2:Triangle wave 3:Gray Scale 128 Steps 4:Moving Sawtooth wave

Command No. Bit No.	Command Description
81h	【FFC Mode】Initial Data:1 To set the FFC mode. 0:OFF => Non-correction video output 1:ON（Gain + Offset） => Corrected video output（Gain + Offset） 2:FFC value => FFC value output on the video signal 3:Manual（by pixel） => Set the correction value into each pixel 4:Manual（all pixels） => Set the correction value into the all pixels 5:Auto（Gain） => Calculate the correct Gain value automatically. 6:Auto（Offset） => Calculate the correct Offset value automatically. 7:ON（only Offset） => Corrected video output（only Offset） 8: Auto target（Gain） => Find the appropriate Gain Target and calculate the correct Gain value automatically *Camera start the operation when the changing the mode under Auto setting.
82h	【Select FFC (Gain,Offset)】Initial Data:1 To select Gain or Offset correction value on the Manual Mode of FFC Mode(81h). 0:Non 1:Gain 2:Offset
83h	【FFC Corrected Value Output】Initial Data:0 To select FFC corrected value on the FFC value of FFC Mode(81h). 0:Upper bit 1:Lower bit
84-85h	【FFC Data】Initial Data:0 To set the corrected vale on the Manual Mode of FFC Mode(81h). 0～65535
86-87h	【FFC Address】Initial Data:0 To set the pixel address data on the Manual Mode of FFC Mode(81h). 0～Maximum value（It depends on camera model） *Left side of image is as “0”
88h	【Target FFC Gain】Initial Data:200 To set the target level(8bit) on Auto (Gain) mode of FFC Mode(81h). 0～255
8Ah	【Target FFC Offset】Initial Data:3 To set the target level(8bit) on Auto (Offset) mode of FFC Mode(81h). 0～255
8Ch	【FFC Corrected Value Store Mode】Initial Data:0 To set the saving mode of FCC corrected value. 0: Standard => Use the one corrected FFC value (Automatically changed for output mode) 1: Bank Mode => Select the several corrected FFC value *Under the Standard setting, corrected FFC value will be loaded automatically, if signal wave is changed for each output mode.

<table>
<tr><th>Command No.
Bit No.</th><th>Command Description</th></tr>
<tr><td>8Dh</td><td>【FFC Corrected Value Store Mode(Bank)】Initial Data:0
To set the Bank number on Bank Mode of FFC Corrected Value Store Mode(8Ch).
0～7
*FFC value would not be loaded automatically even changing this setting.</td></tr>
<tr><td>96h</td><td>【Un-detect Chattering Period】Initial Data:0
To set the time period of un-detect chattering.
This function can be used the input trigger signal from CC1.
The trigger is recognized through consecutive this number of high signal (by CLK）.
0～255</td></tr>
<tr><td>A7h</td><td>【User ID】Initial Data:0
To set the User ID.
When several cameras are using, each camera can be assigned the specific name.
0～255</td></tr>
<tr><td>ACh</td><td>【BUSY】Initial Data: Read Only
To understand the communication status.
0: Enable the communication
1～255: Disable the communication</td></tr>
<tr><td>AEh</td><td>【BINNING】Initial Data:0
【Output Mode】To select the Binning/Average when the appropriate mode is selected on EEh.
<u>0:Add</u> (Binning) Added the value for each pixel
1:Ave (Average) Averaged the value for each pixel
*Please use the Binning for increasing the sensitivity. Please use the Average to improve the SN ratio.</td></tr>
<tr><td>B0-B1h</td><td>【AOI Start Pixel】Initial Data:0
To set the start Pixel position. Maximum value depends on sensor size.</td></tr>
<tr><td>B7h</td><td>【STATUS】Initial Data：Read Only
To read the FFC status.
D[7:0]
<table>
<tr><th>D7</th><th>D6</th><th>D5</th><th>D4</th><th>D3</th><th>D2</th><th>D1</th><th>D0</th></tr>
</table>
D7-5:No-function 0: Fix
D4:Status of Shield light level 0: Normal 1: Shield light level is always 0.
D3:FFC Gain over 0: Normal 1: Light receiving level is higher than Target level(Gain)
D2:FFC Gain short 0: Normal 1: Light receiving level is lower than Target level(Gain)
D1:FFC Offset over 0: Normal 1: Shield light level is bigger than maximum offset
D0:FFC Offset short 0: Normal 1: Shield light level is lower than Black level</td></tr>
<tr><td>BAh</td><td>【1LINE DELAY】Initial Data：0
To set the 1 line delay.
0: OFF
1: Lower line delay
2: Upper line delay</td></tr>
<tr><td>C0-C1h</td><td>【AOI width of LVAL】Initial Data: Maximum of pixel number for each model
To set the valuable length on AOI image. Maximum value depends on sensor size.</td></tr>
<tr><td>C7h</td><td>【Scan Direction】Initial Data:0
<u>0:Normal</u>
1:Reverse
2-255:Invalid</td></tr>
</table>

Command No. Bit No.	Command Description
CBh.0-1	【Communication Mode】Initial Data: 0 To set the Specific Communication Mode. Please set this parameter ”ON” , when external sync does not input camera. 0:OFF Normal Mode (Communication just only work with external sync) 1:ON Specific Communication Mode (Internal Sync mode without video image output) 2-3:Invalid
CE-CFh	【Line rate for Internal Sync Fix Mode】Initial Data:0 To set the line rate for Internal Sync Fix Mode. As for the actual formula, please refer to the address 11h. 0～65535
E0h.4	【Clear FFC(Gain) RAM】Initial Data: Write Only To clear the FFC Gain data on the RAM. Set “1”
E1h.1	【Clear FFC(Offset) RAM】Initial Data: Write Only To clear the FFC Offset in data on the RAM. Set “1”
E1h.3	【Load FFC(Factory setting）】Initial Data: Write Only To load the FFC Gain(Factory setting). Set “1”
E1h.4	【Set FFC】Initial Data: Write Only To set the FFC value when FFC Manual mode was selected(81h). Set “1”
E1h.6	【Save FFC】Initial Data: Write Only To save the FFC Gain value into the RAM. Set “1”
E1h.7	【Load FFC】Initial Data: Write Only To load the FFC Gain from RAM. Set “1”
E2h.0	【Save Camera Setting】Initial Data: Write Only To save the camera setting data into the RAM. Set “1”
E2h.1	【Load Camera Setting】Initial Data: Write Only To load the camera setting data from RAM. Set “1”
E2h.3	【Load Camera Setting（Factory Default）】Initial Data: Write Only To load the factory default setting from RAM. Set “1”
EEh	【Output Mode】Initial Data: It depends on camera model To set the camera output mode. Therefore it could be selectable of Camera link Full/Medium/Base configuration, Camera Link output CLK. Selectable Output Mode is different for each model. *8bit, 10bit or 12bit output is available for some output mode. *Maximum line rate on the internal sync is changed based on the selected output mode. *Please check the output modes list for each camera. *FFC value is changed automatically based on the selected output mode when Standard is selected at FFC corrected value store mode.

6. Function Description

6.1 Binning

In order to increase sensitivity or improve signal noise, the value for each pixel can be Added or Averaged via the “Binning” function.

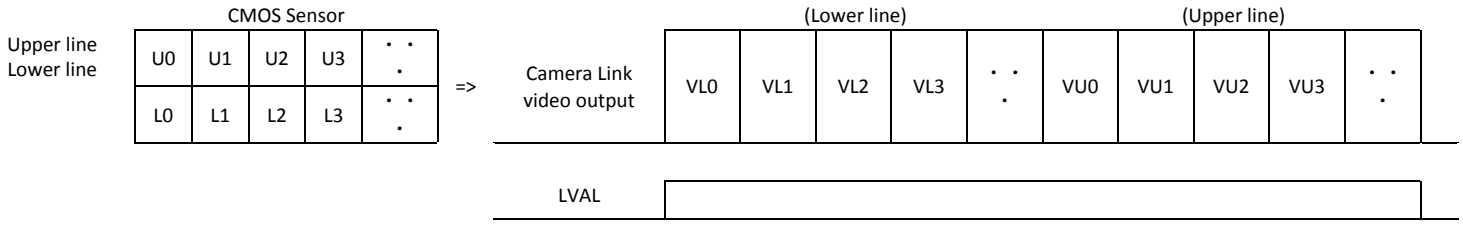

Ux: Upper line pixel of CMOS sensor
Ux: Lower line pixel of CMOS sensor
VLx: Video output of Camera Link for Lower line
VUx: Video output of Camera Link for Upper line

H-Binning(H bin) Mode
2 horizontal pixels are added (or averaged), half the number of pixels data are output.
U0+U1 -> VU0, L0+L1 -> VL0, U2+U3 -> VU1, L2+L3 -> VL1...

V-Binning(V bin) Mode
Upper pixel and Lower pixel are added (or averaged) and output as 1 line data.
U0+L0 -> VL0, U1+L1 -> VL1, U2+L2 -> VL2...

HV-Binning(HV bin) Mode
2 horizontal pixels are added (or averaged) and Upper pixel and Lower pixel are added (or averaged).
A quarter of Total pixel number is output.
U0+U1+L0+L1 -> VL0, U2+U3+L2+L3 -> VL1...

Note: Add and Average are selectable on the register AEh.
Add: To increase the sensitivity
Average: To improve the Signal Noise ratio

6.2 One Line Delay

Upper or lower can be one line delay.
Therefore, this delay can correct the measurement point differential.
Delay line can be selected through RAh.

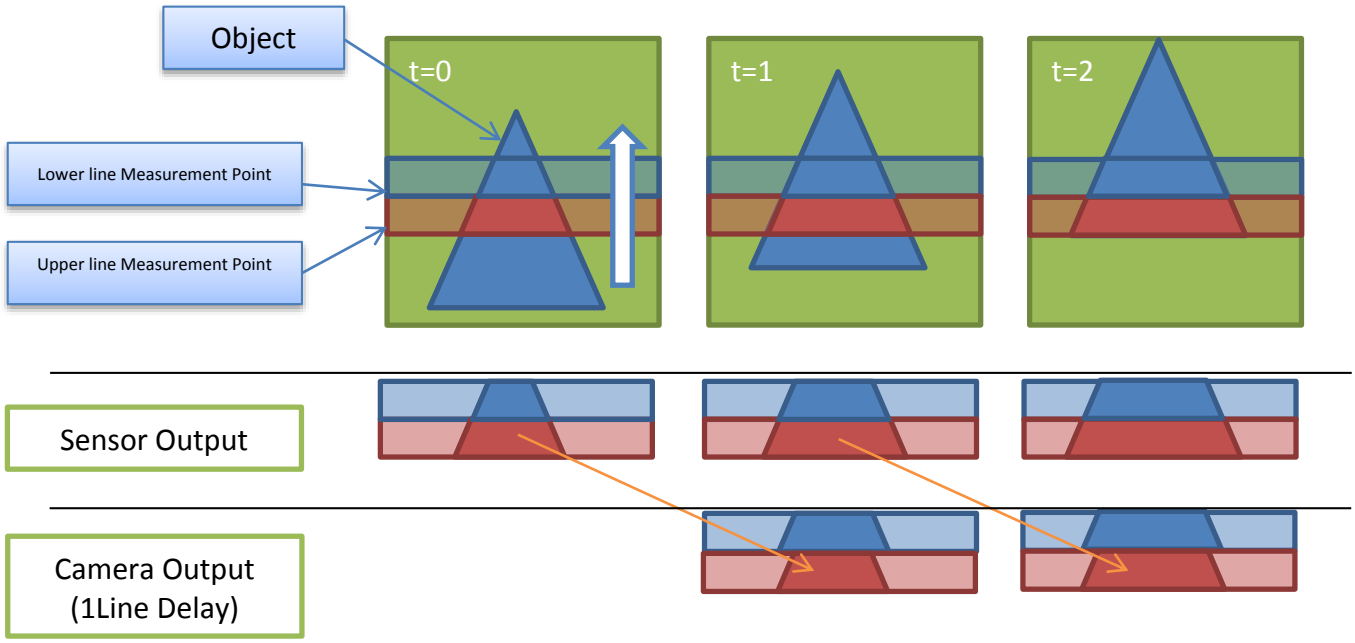

6.3 FFC

FFC (Field Flat Correction) is used for correcting non-uniformity within the image brightness resulting from the lens of the imager. In using this camera, FFC should be used due to the imager having a fixed pattern noise.

6.3.1 Summary of FFC

Gain and offset are added for each pixel to work FFC. Adding the gain will make the gray video level flat.

Adding the offset will make the shield light level flat. The FFC concept is shown on the chart below.

Video output image

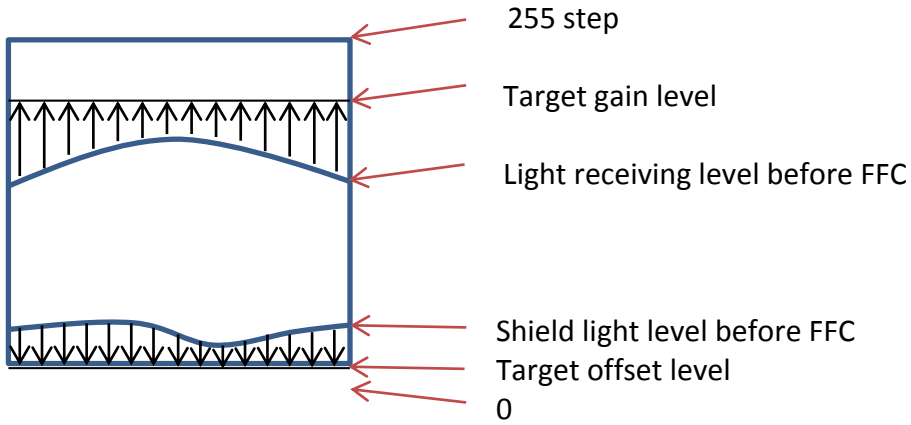

6.3.2 Technical Terminology

[AAh: B]

Please set the value on the address as below:

AA: Register address (Hex)

B: Vale (Dec)

6.3.3 Auto FFC Procedure

After the target gain level and target offset level have been set, the camera corrects the gain and offset value automatically under the calibration setting.
The user has to set the FFC under their own condition. If the wrong procedure is executed, the correction can be recovered from the beginning.

[Procedure]
1) Set the [FFC Mode] to **OFF** {81h: 0}
   (This register is the trigger at 4.)
2) Set the Value for [Target FFC Offset] {8Ah: 5}
   Set the offset value between the range of 0 to 255. (Recommended Value: 5)
3) Shield the light
4) Set the [FFC Mode] to **Auto(Offset)** {81h: 6)

Video output image

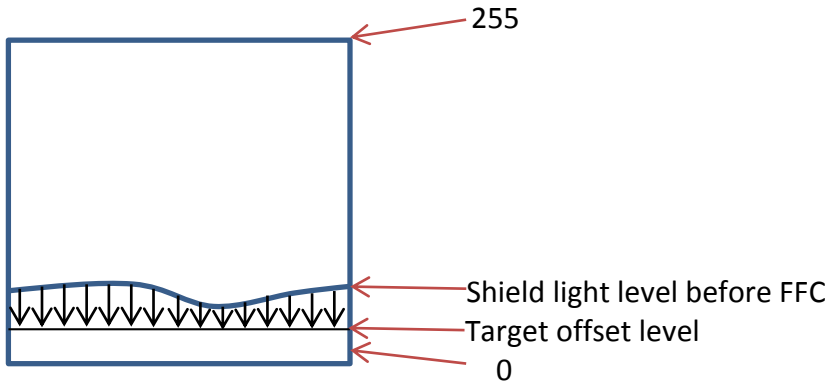

5) Set the [FFC Mode] to **ON** (Only Offset) {81h: 7}
   (This setting is necessary to determine the target level for checking the actual video image at the next step).
6) Un-Cover the Sensor
   Please do not make a saturated image.
   Focus on a clean white object for calibration and set the parameters for the actual condition.

Here is the junction point
If the case is “Auto Target” -> jump to 11)
Auto Target is the function that set the target gain level automatically.
The formula Target gain level = Maximum light receiving level +α is used to determine the target gain level,

If the case is “Fixed Target Level” -> jump to 7)

7) Set the [Target FFC Gain] level {88h: 200}
The configurable range is between 0 to 255.
The value should be ten steps bigger than the brightest level on the video image.
Pixels with brightness values higher than the target gain level will not be corrected and will be output as is.
Initial [Target FFC Gain] level is 200. The user can adjust this level with the actual video image.

8) Set the [FFC Mode] to **Auto(Gain)** {81h: 5}

Video output image

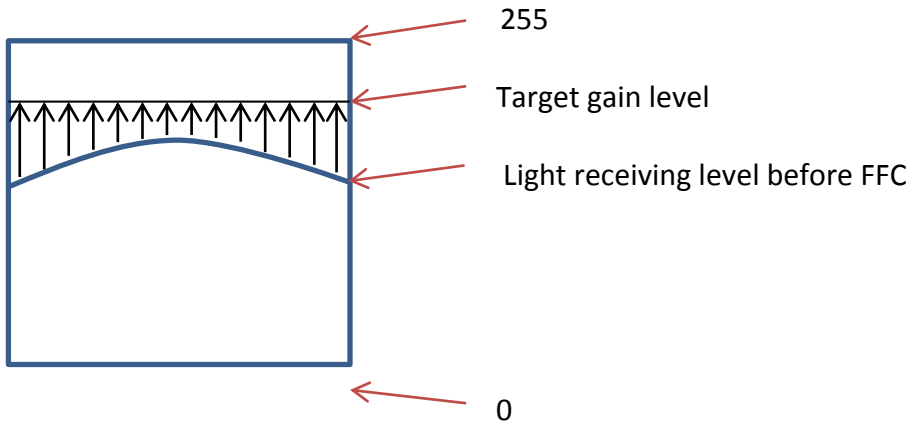

9) Confirm the FFC Function
Set the [FFC Mode] to **ON(Gain + Offset)** {81h: 1}
10) Check the Saturation Level
This value should be 255.
Please extend the exposure time, increase the light source, or open the IRIS.
If unsaturated pixels (less than 255) still exist, set the [Target FFC Gain] to {88h} again. This value should be larger than the previous value.

Video output image

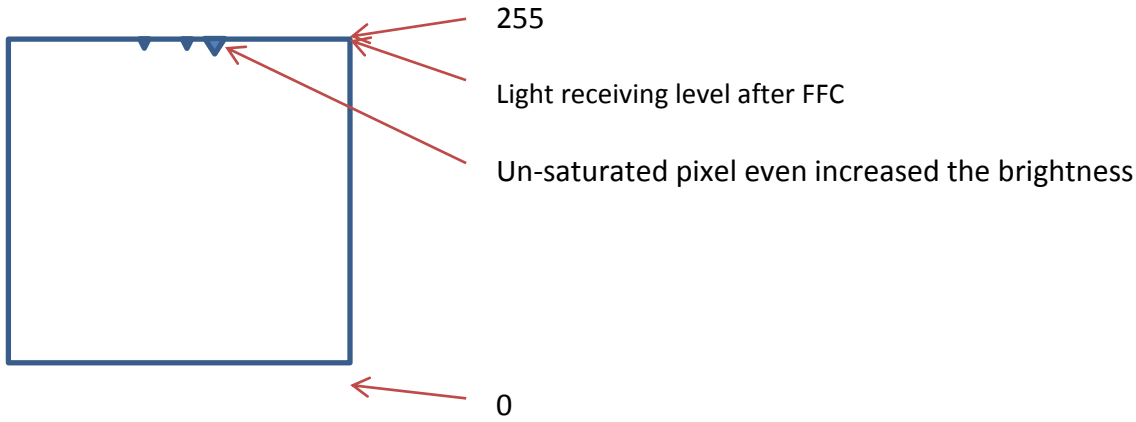

This is the end of FFC Setting (Auto).

Here is the junction point

If the user is using “Auto Target”, Please continue in the following steps.

11) Set the Target offset level for gain [88h: Recommendation 20]
Set the value from the range 0-255(8bit).
To determine the target level automatically, offset level have to be set.
(Target level should be the same value of this Target offset level plus highest point of light receiving level)

12) Set the Auto on FFC mode (Gain) (Auto Offset) [81h: 8]
Gain correction works automatically.

Video output image

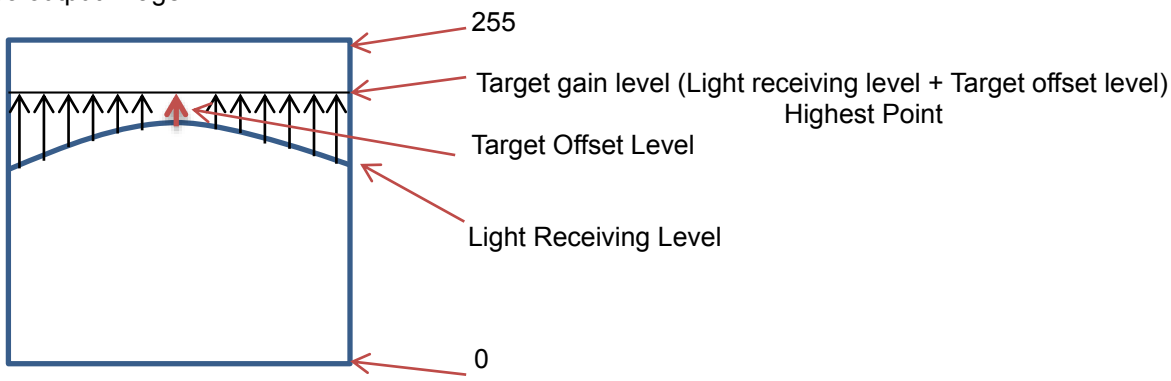

Return to 8)

6.3.4 Manual FFC Procedure

The **Manual** [FFC Mode] can correct specific pixels and correct all pixels of the same value.
When dust creates a gap in the calibration object, the user can revise the value of that specific pixel address.

[Procedure (by pixel)]
1) Set [FFC Mode] to **Manual (all pixels)** {81h: 3}
2) Set the **Select FFC (Gain,Offset)** to determine the output gain or offset {82h:}
3) Set the pixel address on [FFC Address} {86-86h:}
4) Set the FFC Value on {FFC Data} {84-85h:}
5) Set the [Set FFC] to "1" in order to reflect the changes to camera. {E1h, 4:1}

[Procedure (all pixels)]
1) Set the [FFC Mode] to **Manual (all pixels)** {81h:4)
2) Set the Select **FFC (Gain,Offset)** to determine the output gain or offset {82h}
3) Set the FFC Value on [FFC Data] {84-85h}
4) Set the [Set FFC] to "1" in order to reflect the changes to camera. {E1h, 4:1}

6.3.5 Confirm FFC

FFC value [Gain/Offset] can be confirmed for each pixel as the video output data.

[Procedure]
1) Set the FFC Value on [FFC Mode] {81h: 2}
2) Set the Select **FFC (Gain,Offset)** to determine the output gain or offset {82h:}
3) Set the [FFC Corrected Value Output] to determine the output's upper or lower byte {83h:}

6.3.6 Save FFC

[FFC Data} can be saved on the EEPROM / FLASH memory. Once the data has been saved, the FFC will remain after the camera has been powered down.

Save FFC {E1h, 6:1}
Load FFC {E1h, 7:1}

6.4 Test Patterns

6.4.1 FS-B2KU7DCLU (V Binning, HV Binning)

78h =1

78h =2

78h =3

78h =4

6.4.2 FS-B2KU7DCLU (High Speed, H Binning)

78h =1

78h =2

78h =3

78h =4

6.4.3 FS-B4KU7DCLU (V Binning, HV Binning)

78h =1

78h =2

78h =3

78h =4

6.4.4 FS-B4KU7DCLU (High Speed, H Binning)

78h =1

78h =2

78h =3

78h =4

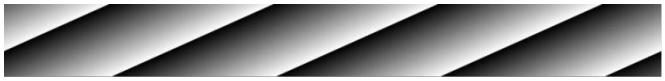

6.4.5 FS-B8KU7DCLU (V Binning, HV Binning)

78h =1

78h =2

78h =3

78h =4

6.4.6 FS-B8KU7DCLU (High Speed, H Binning)

78h =1

78h =2

78h =3

78h =4

7. Timing Chart

7.1 Exposure Timing

EXT_LINE

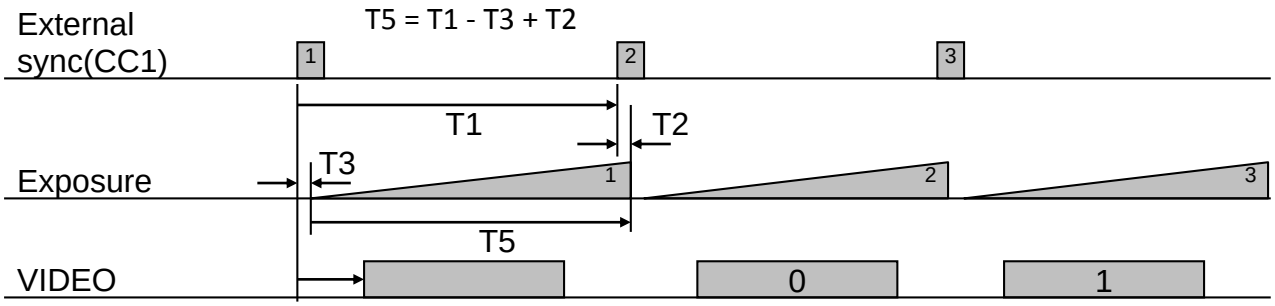

EXT_FIX MODE

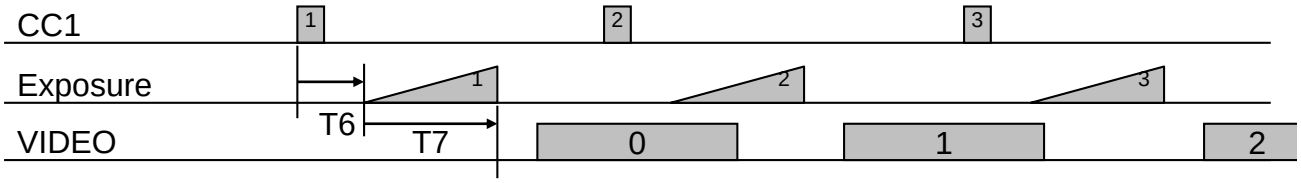

PULSE MODE

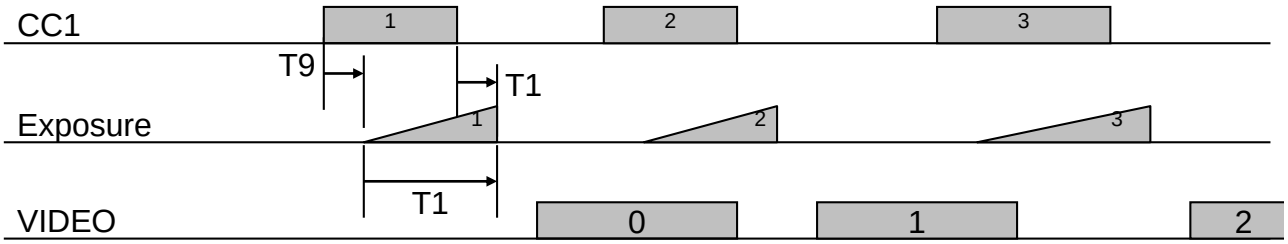

INTERNAL MODE LINE

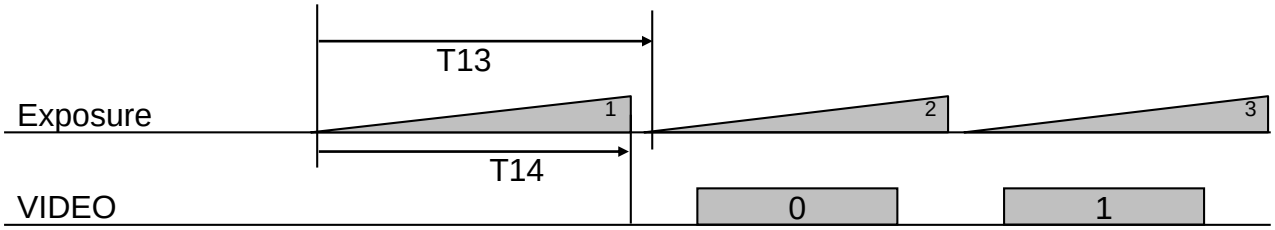

INTERNAL MODE FIX

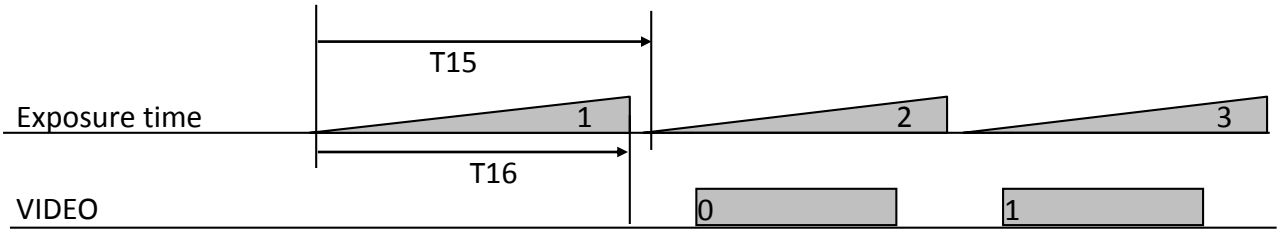

Label	Description	Value [us]
T1	Line interval	External sync：CC1 line period
T2	Sync rise to exposure end	(17 x B) + 1
T3	Sync rise to exposure start	(30 x B) + 3
T5	Exposure time(EXT_LINE)	T1 – (13 x B) – 2
T6	CC1 rise to exposure start(EXT_FIX)	(17 x B) + 2
T7	Exposure time (EXT_FIX)	20-21h x C + 2 min setting：**20-21h** = 0 Maximum Exposure Time : Line period - 3us
T9	CC1 rise to exposure start PULSE)	(17 x B) + 2
T10	CC1 fall to exposure end PULSE)	(17 x B) + 1
T12	Exposure time (PULSE)	Pulse width of CC1(High) – 1
T13	Line interval (INTERNAL LINE)	(20-21h x C)+A
T14	Exposure time (INTERNAL LINE)	(20-21h x C)+A-(2+13x B)
T15	Line interval (INTERNAL FIX)	CE-CFh x C+A
T16	Exposure time (INTERNAL FIX)	20-21h x C+2
T17	Minimum Video output time	B2KU7DCLU: 24us B4KU7DCLU: 24us B8KU7DCLU: 43us This value is available on Sensor mode = 9bit. As for the detail of “Sensor mode”. Please refer to chapter 4.1, 4.2 and 4.3.

Coefficient A, B and C are different in each model. Actual values are as below. ① is the value on 20-21h.

As for the “Pulse Mode”, Minimum and Maximum Pulse widths are as follows:
Minimum Pulse Width = 3us, Maximum Pulse Width = Line Cycle - 2us.

A. Minimum Line Period (us)

Output mode (EEh)	FS-B2KU7DCLU	FS-B4KU7DCLU	FS-B8KU7DCLU
0	12.8	-	-
1	12.4	12.4	24.8
2	12.4	12.4	24.8
3	12.4	12.8	24.8
4	24.8	-	-
5	12.4	12.4	24.8
6	12.4	12.8	24.8
7	12.4	12.4	24.8
8	12.4	12.4	24.8
70	12.4	13.2	26.0
71	13.6	26.4	52.0
72	12.4	12.4	24.8
73	12.4	13.6	26.4
74	12.4	12.4	24.8
75	12.4	12.4	24.8
90	12.4	12.4	24.8
91	12.8	26.4	52.0
92	13.6	12.4	24.8
93	12.4	13.6	24.8
94	26.4	12.8	26.4
95	12.4	12.4	24.8
96	12.4	12.8	24.8
97	12.4	13.6	26.4
98	24.8	12.4	24.8
99	26.4	26.4	52.0
100	12.4	12.4	24.8
101	12.4	12.4	24.8
102	12.4	13.2	26.0
103	13.6	26.4	52.0
104	12.4	12.4	24.8
105	12.4	13.6	26.4
106	12.4	12.4	24.8
107	13.6	12.4	24.8
108	12.4	24.4	-
109	12.4	26.0	-
110	12.4	52.0	-
111	12.4	48.5	-
112	-	51.6	-
113	-	103.2	-

B. CLK Period

Model	Value [us]
FS-B8KU7DCLU	0.0235
FS-B4KU7DCLU, FS-B2KU7DCLU	0.0117

C. Amount of Time Changed per Step

Model	Value [us]
FS-B8KU7DCLU	0.4
FS-B4KU7DCLU, FS-B2KU7DCLU	0.2

8. Quantum Efficiency

[e-/photon]

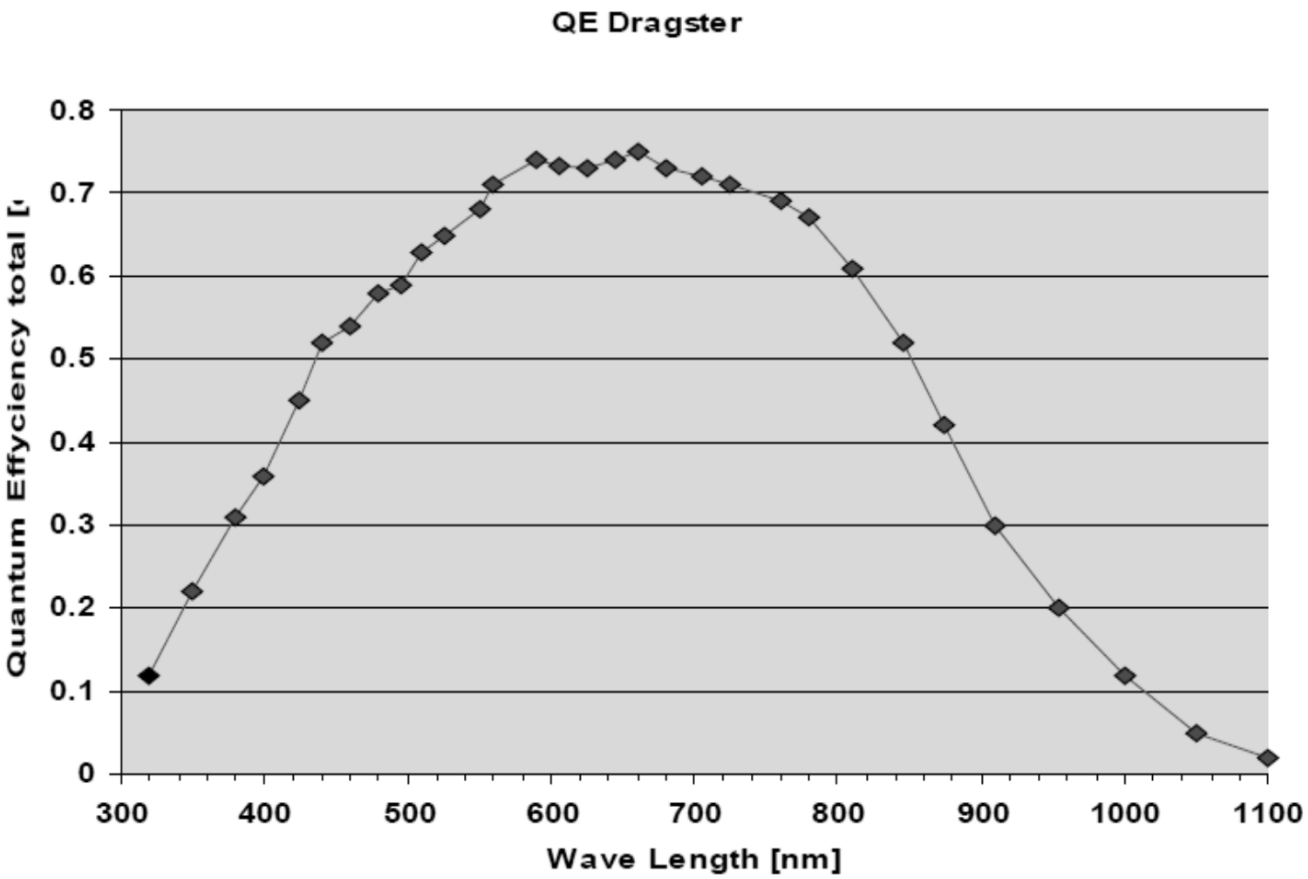

9. Dimensions

9.1 FS-B2KU7DCLU-C

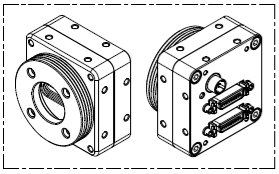

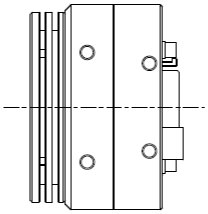

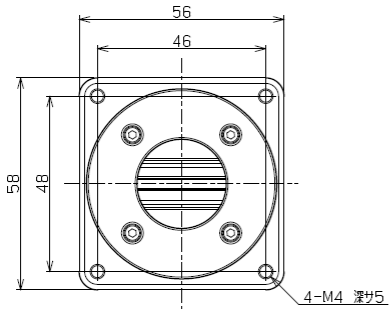

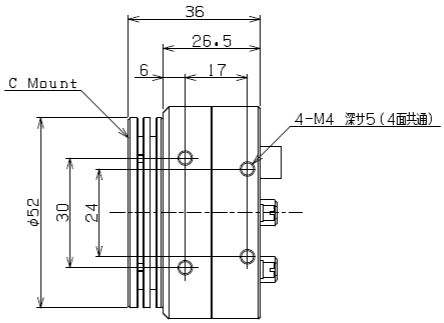

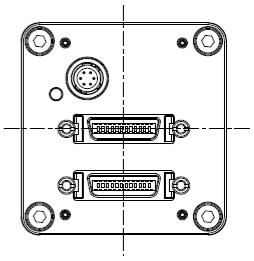

Unit: mm

9.2 FS-B4KU7DCLU-F / FS-B2KU7DCLU-F

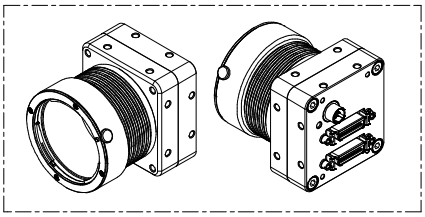

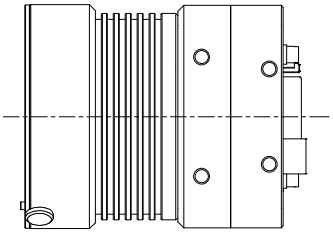

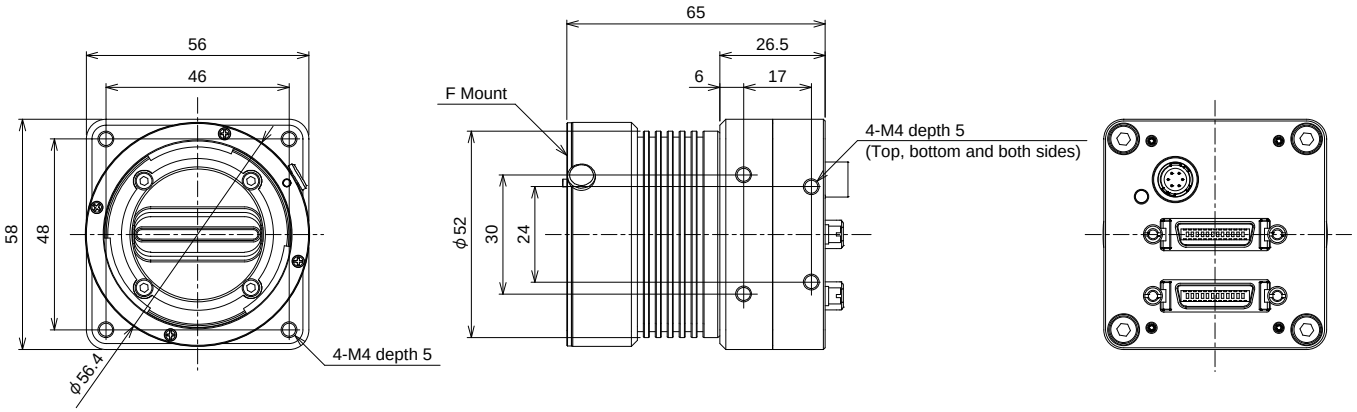

Unit: mm

9.3 FS-B8KU7DCLU-M72

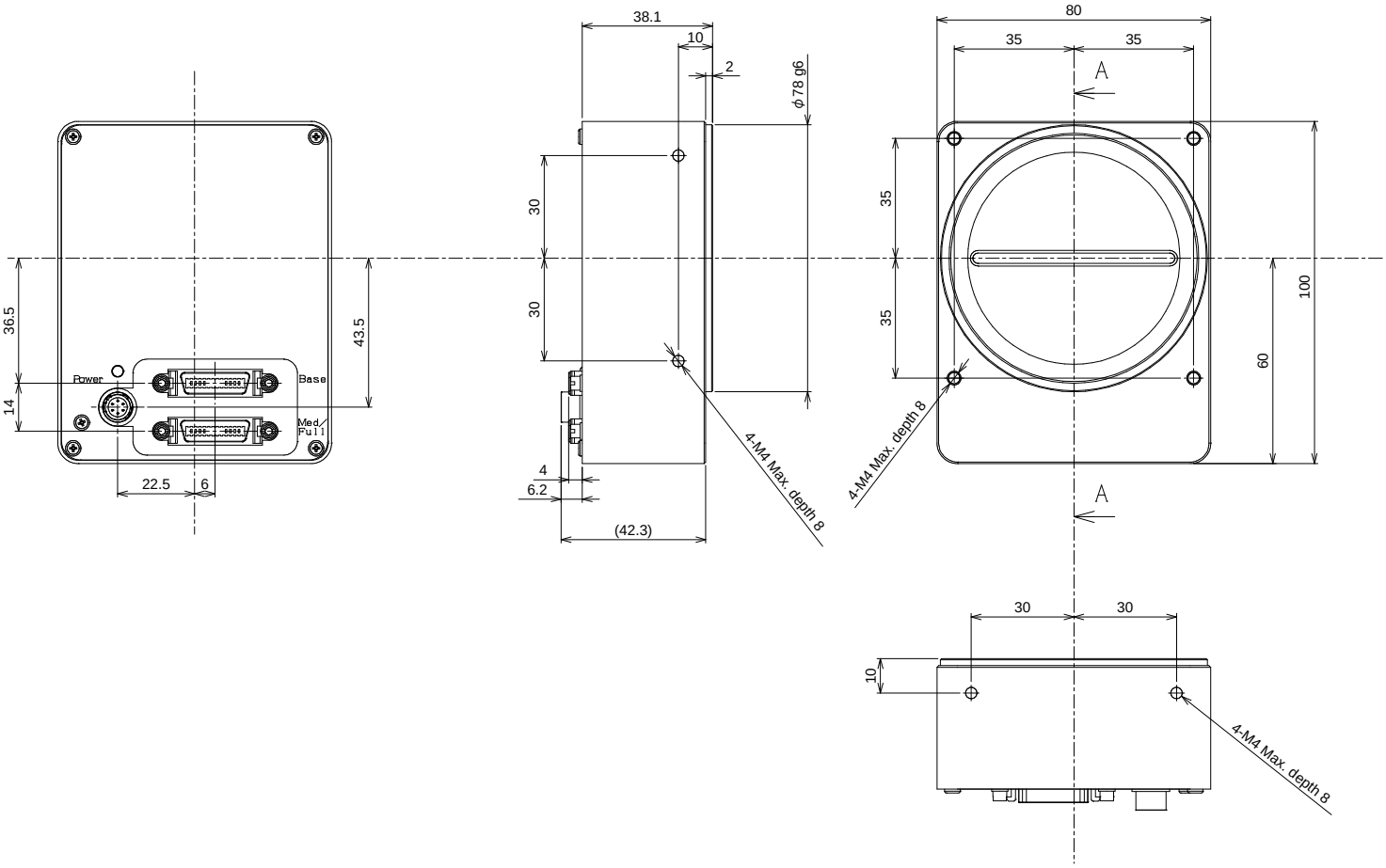

Unit: mm

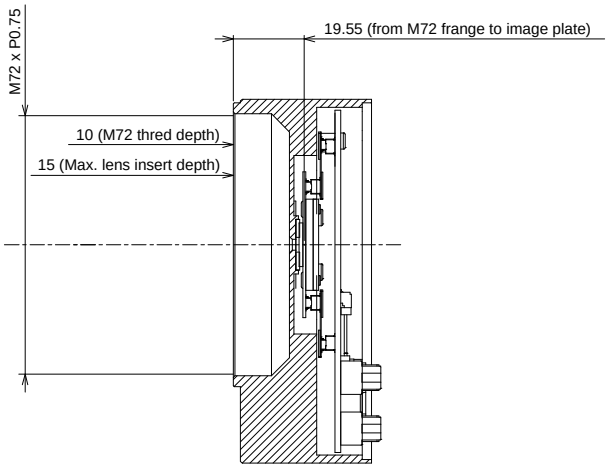

Cross section A - A

Revisions

Rev.	Date	Changes	Editor
.02	9/27/2013	Created New Document	RM

Sensor Technologies America, Inc.
1345 Valwood Pkwy, Suite 320
Carrollton, TX 75006
TEL:(972)-481-9223
FAX: (972)-481-9209
www.SentechAmerica.com