OMRON

Advanced Motor Condition Monitoring Device
K7DD

Implementing predictive maintenance with real-time condition monitoring of variable speed motors

- Monitors a servo motor or induction motor that changes speed frequently.
- Monitors every load side connected to the motor.
- A single K7DD device can identify multiple failure modes.
- Calculate approximately 400 types of feature values from the current and voltage.
- Detects the failure mode of various parts using the feature values of captured power quality.
- Condition monitoring that begins with on-site completion.
- K7DD Support tools can help the analyses of inspections.

For the most recent information on models that have been certified for safety standards, refer to your OMRON website.

Overview

The K7DD is a condition monitoring device for supporting condition monitoring and error diagnosis of servo motors and other rotation mechanisms. It captures mechanical errors of a rotation mechanism by measuring the voltage and current from the power line of the rotation mechanism and converting them to various feature values such as power and harmonics.
In addition, K7DD Support Tool is also available to assist more accurate condition monitoring and error diagnosis. This tool enables more precise setting of measurement timing, and automatically calculating the alarm thresholds of feature values by extracting feature values correlated with relevant errors from various feature values.

System Configuration

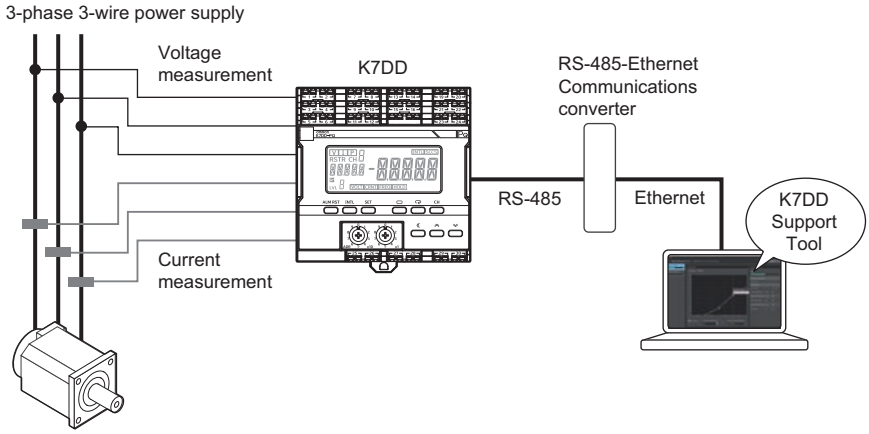

Condition monitoring is possible not only for rotation mechanisms such as servo motors, but also for non-rotating applications such as solenoid valves.

Model Number Structure

Model Number Legend

K7DD - PQ M □
(1) (2) (3) (4)

(1) Base model	(2) Model	(3) Unit type	(4) Power supply voltage	Meaning
K7DD				Power Line Data Generator
	PQ			Voltage and Current
		M		K7DD
			A	100 to 240 V AC power supply
			D	24 V DC power supply

Ordering Information

K7DD

Power supply voltage	Model
100 to 240 V AC	**K7DD-PQMA**
24 V DC	**K7DD-PQMD**

CT (Order Separately)

Rated primary-side current	Model	Model compliant with UL certification
5 A	**K6CM-CICB005**	**K6CM-CICB005-C**
25 A	**K6CM-CICB025**	**K6CM-CICB025-C**
100 A	**K6CM-CICB100**	**K6CM-CICB100-C**
200 A	**K6CM-CICB200**	**K6CM-CICB200-C**
400 A	**K6CM-CICB400**	**K6CM-CICB400-C**

Note: 1. A cable for connection is provided with the CT.
2. K7DD devices are UL-certified when used as a set with a CT model with “-C” at the end. Select a CT with “-C” at the end of the model name if UL certification is required for equipment.
3. The CT input terminals of the K7DD can be connected in either direction of the special CT regardless of polarity.

Accessories (Order Separately)

DIN Tracks	Model
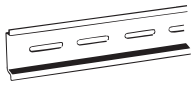	**PFP-100N**
	PFP-50N

End Plate	Model
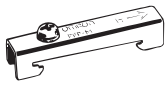	**PFP-M**

Ratings and Specifications

Item		Specifications
Operation power supply	Power supply voltage and frequency	K7DD-PQMA: 100 to 240 V AC, 50/60 Hz K7DD-PQMD: 24 V DC
	Operating power supply voltage range	85% to 110% of the rated voltage
	Operating frequency range	45 to 65 Hz
	Power consumption	K7DD-PQMA: 15.7 VA max. (100 to 240 V AC)
		K7DD-PQMD: 5.2 W max. (24 V DC)
	Recommend external fuse	T2A, time delay, high-breaking capacity
Ambient operating temperature		-10 to 55°C
Ambient operating humidity		25% to 85%
Storage temperature		-20 to 65°C (with no condensation or icing)
Altitude		2,000 m max.
Insulation resistance		20 mΩ min. Between the power supply terminals and the other terminals; Between all the terminals and the case; Between (communications terminals + trigger input terminals + alarm output terminals) and the other terminals; Between (voltage input terminals + CT input terminals) and the other terminals
Dielectric strength		2,000 V AC for 1 minute Between the power supply terminals and the other terminals; Between all the terminals and the case; Between (communications terminals + trigger input terminals + alarm output terminals) and the other terminals; Between (voltage input terminals + CT input terminals) and the other terminals
Vibration resistance		Frequency 10 to 55 Hz, 0.35-mm single amplitude, acceleration 50 m/s^2, 10 sweeps of 5 min each in X, Y, and Z directions
Shock resistance		100 m/s^2, 3 times each in X, Y, and Z axes, 6 directions
Degree of protection		IP20
Terminal block type		Push-In Plus
Exterior color		Black (Munsell N 1.5)
Mounting		DIN Track
Weight		Approx. 360 g
Wiring material	Wire type	Solid or Stranded wire
	Wiring material	Copper
	Recommended wires	0.25 to 1.5 mm^2 AWG 24 to AWG 16
	Stripping length (without ferrules)	8 mm ✻, 10 mm, 12 mm ✻ without ferrules
Installation environment		Operation voltage: EN/IEC 61010-1 Pollution Degree 2, Overvoltage category II
		Measurement circuit: EN/IEC 61010-2-030 Pollution Degree 2, CAT II 600 V or CAT III 300 V
Industrial electromagnetic environment		EN/IEC 61326-1 Industrial electromagnetic environment
Safety standards		UL61010-1, Korean Radio Waves Act (KS C 9610-6-2, KS C 9811), RCM, UKCA

Measurement Specifications

Item		Specifications	Conditions
Input range (Displayable range)	Current	5 A range: 0.275 to 5.5 A 25 A range: 1.375 to 27.5 A 100 A range: 5.5 to 110.0 A 200 A range: 11.0 to 220.0 A 400 A range: 22.0 to 440.0 A	Defined by R.M.S. values using a sine wave. The power frequency must be within the acceptable range.
	Voltage	150 V range: 8.3 to 165.0 V 300 V range: 16.5 to 330.0 V 600 V range: 33.0 to 660.0 V	
	Power frequency	40 to 250 Hz	Sine-wave or single-order harmonic content must be 20% or less.
Input ratings (Measurement accuracy guarantee range)	Current	5 A range: 1.0. to 5.0 A 25 A range: 5.0 to 25.0 A 100 A range: 25.0 to 100.0 A 200 A range: 100.0 to 200.0 A 400 A range: 200.0 to 400.0 A	Defined by R.M.S. values using a sine wave. The power frequency must be within the acceptable range.
	Voltage	150 V range: 75.0 to 150.0 V 300 V range: 150.0 to 300.0 V 600 V range: 300.0 to 600.0 V	
	Power frequency	45 to 245 Hz	Since wave
Measurement accuracy (Ambient temperature: 10 to 30°C)	Current	Absolute accuracy: 0.5%FS±1digit Repeat accuracy: ±1%rdg±1digit	Not including accuracy variation of CTs The power frequency must be within the rated range.
	Voltage	Absolute accuracy: 0.5%FS±1digit Repeat accuracy: ±1%rdg±1digit	The power frequency must be within the rated range.
	Active/ reactive power	Absolute accuracy: ±2%FS±1digit Repeat accuracy: ±1%rdg±1digit	Power factor 1 The power frequency must be within the rated range.
	Power frequency	Absolute accuracy: 0.5%FS±1digit Repeat accuracy: ±1%rdg±1digit	Sine wave

Measurement Target

The K7DD can measure both the voltage and current or only the current of power lines that drive motors, valves, and other measurement targets. There are three wiring methods depending on the phase-wire system of the power supply.

Single-phase alternating current	3-phase alternating current	
<Single-phase current>	**<3-phase 3-wire (3P3W2M)>**	**<3-phase 4-wire (3P4W)>**
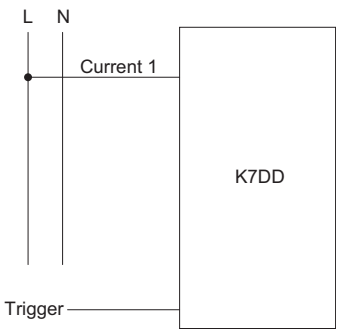	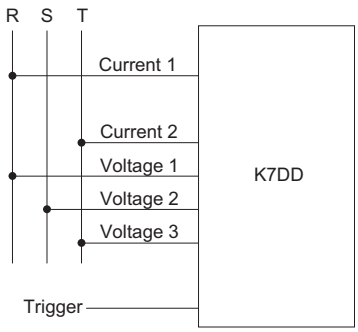	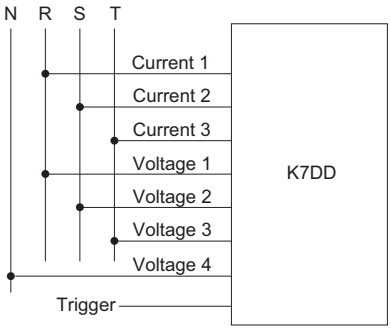

Calculable Feature List

Name		Single-phase current	3P3W2M	3P4W
Voltage	R.M.S. value	---	Possible	Possible
	Fundamental amplitude	---	Possible	Possible
	Waveform peak +	---	Possible	Possible
	Waveform peak –	---	Possible	Possible
	Total harmonic distortion	---	Possible	Possible
	Unbalance factor	---	Possible	Possible
Current	R.M.S. value	Possible	Possible	Possible
	Fundamental amplitude	Possible	Possible	Possible
	Waveform peak +	Possible	Possible	Possible
	Waveform peak –	Possible	Possible	Possible
	Total harmonic distortion	Possible	Possible	Possible
	Unbalance factor	---	Possible	Possible
Power	Active	---	Possible	Possible
	Deactive	---	Possible	Possible
	Apparent	---	Possible	Possible
Power factor		---	Possible	Possible
Harmonic	Current content rate	Possible	Possible	Possible
Frequency		Possible	Possible	Possible

When this unit is combined with the support tool, all of the above features can be checked.
The measurement values that can be checked by this unit alone are as follows.
R.M.S. voltage, R.M.S. current, voltage fundamental amplitude, current fundamental amplitude, active power, power factor, frequency, voltage total harmonic distortion, and current total harmonic distortion

Trigger Input Terminals

Item	Specifications
Input type	NPN open-collector
Residual voltage at short circuit	1.5 V max.
Open leakage current	0.1 mA max.
ON current at short circuit	Approx. 7 mA
Minimum detection time	Received as a valid continuous input for at least 50 ms for both ON and OFF.

Output Specifications of Transistor Output Terminals

Item		Specifications
Transistor output (Alarm output, Output at error)	Contact form	NPN open collector
	Rated voltage	24 V DC (maximum voltage: 26.4 V DC)
	Maximum current	50 mA
	Leakage current when power turning OFF	0.1 mA max.
	Residual voltage	1.5 V max.

Communications Specifications

Item		Specifications
RS-485 communications 1 RS-485 communications 2	Transmission path connection method	RS-485: Multidrop
	Communications method	RS-485 (2-wire, half duplex)
	Cable length	When the baud rate is 115.2 kbps or less, the maximum length is 500 m with a shielded twisted-pair cable. When the baud rate is 230.4 kbps, the maximum length is 200 m with a shielded twisted-pair cable.
	Protocol	Modbus RTU
	Baud rate	9.6 kbps/ 19.2 kbps/ 38.4 kbps/ 57.6 kbps/ 115.2 kbps/ 230.4 kbps
	Data length	Always 8 bits
	Stop bits	Always 1 bit (with parity being even/odd) Always 2 bits (with parity being none)
	Connection configurations	1:1 or 1:N
	Maximum number of Units	32 Units (including the host system)
	Parity	None/Even/Odd
	Send wait time	0 to 99 ms

Ratings and Specifications of CT*1

Model / Item	K6CM-CICB005(-C)	K6CM-CICB025(-C)	K6CM-CICB100(-C)	K6CM-CICB200(-C)	K6CM-CICB400(-C)
Construction	Internal split type				
Primary-side rated current	5 A	25 A	100 A	200 A	400 A
Rated voltage	600 V AC				
Secondary winding	3,000 turns				6,000 turns
Insulation resistance	Between output terminal and case: 50 mΩ min				
Dielectric strength	Between output terminal and case: 2,000 V AC for 1 minute				
Protective element	7.5 V clamp element				
Allowable number of attachments and detachments	100 times				
Diameter of wire attachable *2	7.9 mm dia. max.	9.5 mm dia. max.	14.5 mm dia. max.	24.0 mm dia. max.	35.5 mm dia. max.
Operating temperature and humidity range	-20 to 60°C, 25% to 85% (with no condensation or icing)				
Storage temperature and humidity range	-30 to 65°C, 25% to 85% (with no condensation or icing)				
Supplied cable length	2.9 m				
Supplied cable terminal	K7DD side: Ferrule, CT side: Round crimp terminal				
Degree of protection	IP20				

*1. To comply with UL certification, refer to *Conformance to Safety Standards*.
*2. When you use a flat wire, refer to the outline dimensional drawing of the relevant CT and use a CT with a larger diameter. However, use the CT within the range of its rated current.

Nomenclature

Front Section

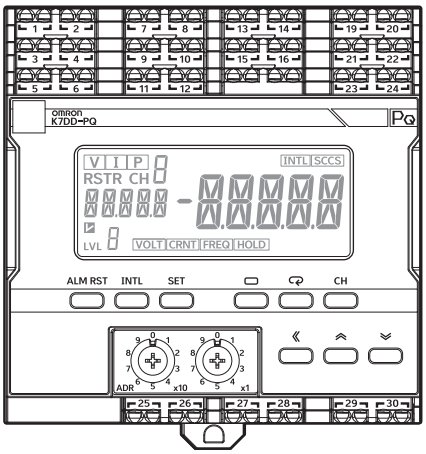

Indicators

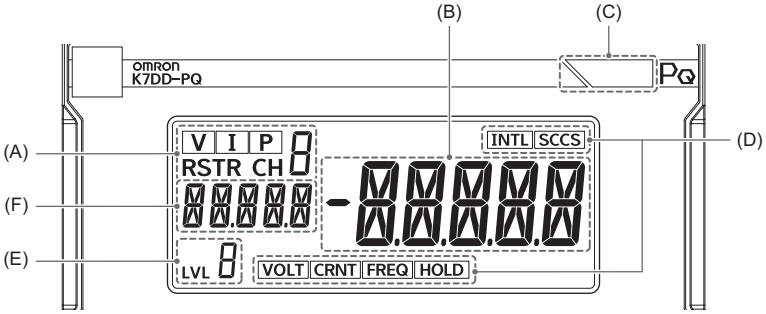

Symbol	Name	Function
(A)	Channel display	• [V] [I] [P]: Lights according to the feature value displayed in the main display. [V]: R.M.S. voltage, voltage fundamental amplitude, and voltage total harmonic distortion [I]: R.M.S. current, current fundamental amplitude, current total harmonic distortion [P]: Active power Not lit: Power factor, Frequency • [R] [S] [T] [R] [CH*]: Lights according to the wiring state and the displayed feature value. **Wiring state** / **Feature value ✱1** / **Displayed channel**: **CH1**, **CH2**, **CH3** 3-phase 3-wire 2-watt meter method (3P3W2M): Feature value of voltage system: RS, ST, TR 3-phase 3-wire 2-watt meter method (3P3W2M): Feature value of current system: R, S, T 3-phase 4-wire (3P4W): Feature value of voltage system: R, S, T 3-phase 4-wire (3P4W): Feature value of current system: R, S, T Single-phase current: Feature value of current system: CH1, CH2, CH3 **✱1.** Not lit for any of the features other than voltage and current systems.
(B)	Main display	Indicates a measurement value or a set value.
(C)	Alarm output indicator	Indicates the alarm judgment results in three colors. Green: Normal Yellow: A warning alarm has occurred. Red: A critical alarm has occurred. It will turn red also if any other fatal failure occurs.
(D)	Status display	[INTL]: Collecting abnormal data (Normal data has been acquired) [SCCS]: Valid feature detected. [VOLT]: Voltage Value Out-of-Range Error has occurred (updated even during hold). [CRNT]: Current Value Out-of-Range Error has occurred (updated even during hold). [FREQ]: Frequency Out-of-Range Error has occurred (updated even during hold). [HOLD]: Measured value is held at the previous value while waiting for trigger.

Symbol	Name	Function
(E)	Level display	Displays the current level. None: Shows that the Unit is on the Monitoring Level. 0: Shows that the Unit is on the Initial Setting Level. 1: Shows that the Unit is on the Communications Setting Level. A: Shows that the Unit is on the Adjustment Level.
(F)	Parameter display	Displays parameters (feature values).

Operation Keys and Switch

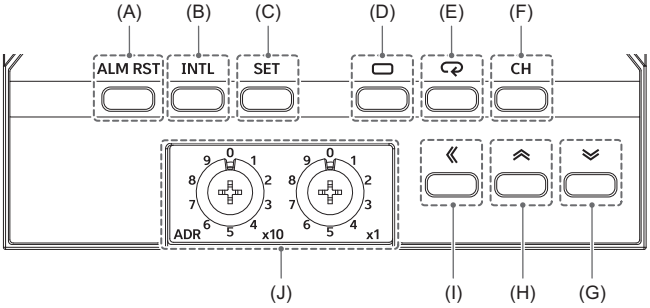

Symbol	Name	Function
(A)	Alarm Latch Cancel Key	Releases the alarm latch.
(B)	Normal Data Acquisition Key	Acquires normal data and then starts the acquisition of error data.
(C)	Abnormal Data Acquisition Key	Completes the acquisition of error data.
(D)	Level Key	Selects the setting level.
(E)	Mode Key	Switches setting parameter displays, on the setting level that allows you to change the parameter. In the Monitoring Level, it switches the displayed measurement values.
(F)	Channel Key	Switches the phase or axis of the displayed feature value.
(G)	Down Key	Decreases the set value for the displayed parameter.
(H)	Up Key	Increases the set value for the displayed parameter.
(I)	Shift Key	Used for digit shift in the set value of the displayed parameter.
(J)	Unit Number Setting Switch	Sets the unit number. The setting range is from 01 to 99. ✻1

✻1. Specifying unit number 00 enables broadcasting.

Terminal Section

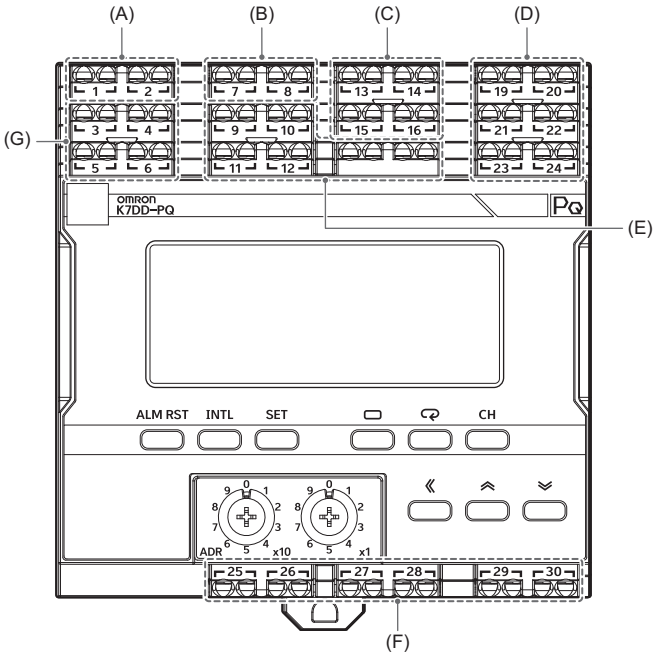

Symbol	Terminal Numbers	Name	Function
(A)	1 and 2	Operation power supply	Connected with the operation power supply to the K7DD.
(B)	7 and 8	Trigger input 1	Used to input the trigger signals of measurement start and end. NPN transistor collector: Number 7 terminal NPN transistor emitter: Number 8 terminal
(C)	13	Voltage Input 1	3-phase 3-wire (3P3W2M) connection: Voltage input 1: Phase-R, voltage input 2: Phase-S, voltage input 3: Phase-T 3-phase 4-wire (3P4W) connection: Voltage input 1: Phase-R, voltage input 2: Phase-S, voltage input 3: Phase-T, voltage input 4: Phase-N
	14	Voltage Input 2	
	15	Voltage Input 3	
	16	Voltage Input 4	
(D)	19 and 20	Current input 1	Single phase current connection: Current input 1: Phase-R 3-phase 3-wire (3P3W2M) connection: Current input 1: Phase-R, Current input 2: Phase-T 3-phase 4-wire (3P4W) connection: Current input 1: Phase-R, current input 2: Phase-S, current input 3: Phase-T Special CT installation orientation K side: Number 19, Number 21, and Number 23 terminals L side: Number 20, Number 22, and Number 24 terminals
	21 and 22	Current input 2	
	23 and 24	Current input 3	
(E)	9 and 10	Not used.	These terminals should not be used. Do not wire anything.
	11 and 12		
(F)	25 and 26	Alarm output 1	Compares the measured feature value and the alarm threshold (critical) to produce an alarm output. (Normally close)
	27 and 28	Alarm output 2	Compares the measured feature value and the alarm threshold (warming) to produce an alarm output. (Normally close)
	29 and 30	Output at Error	Produces an output at error, in case of a self-diagnosis error. (Normally close)
(G)	3 and 4	RS-485 communications 1	The communications protocol is Modbus RTU. Number 3 Terminal: +, Number 4 Terminal: -
	5 and 6	RS-485 communications 2	The communications protocol is Modbus RTU. Number 5 Terminal: +, Number 6 Terminal: -

Note: Carry out the wiring in accordance with *3 Installation and Wiring* of the User's Manual.

Connection Diagram

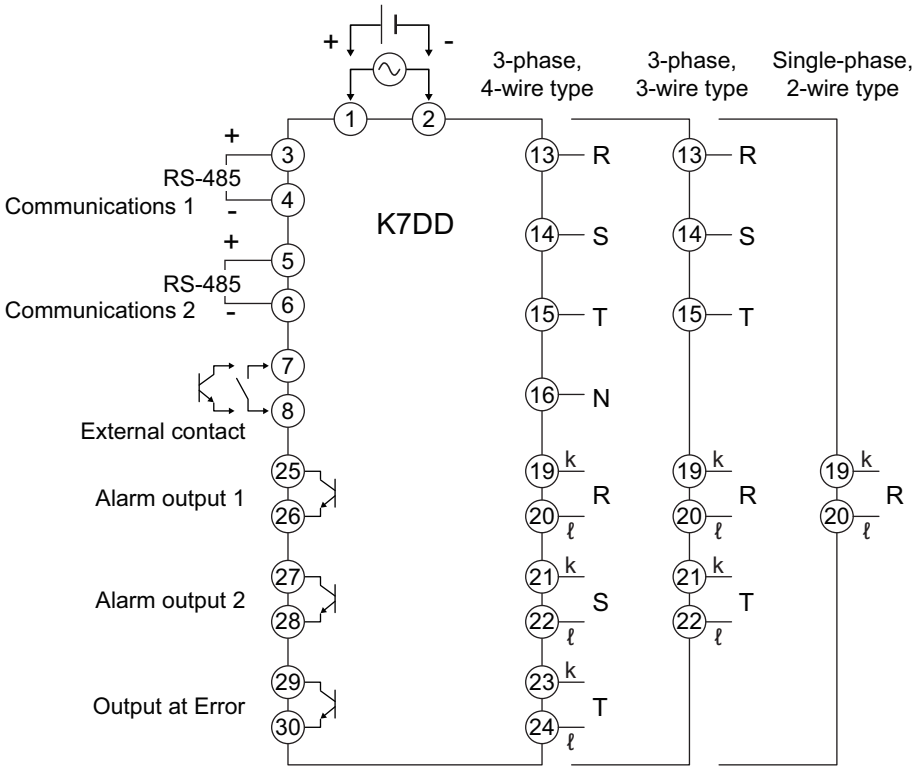

Precautions for polarity of CT input

Installation of the special CTs

- All the special CTs connected to one unit of K7DD must have the same ratings.
- Make sure that the special CT settings on the K7DD match the ratings of the special CTs to be used.
- Check the directions of the power supply side (K) and load side (L) before making the connections. The measurement will not be correct if the direction is wrong.
- Release the split/fastening hook and clamp the special CT on the line for each phase and then press the hook firmly until you hear it lock into place.
- Do not ground the special CT. Doing so may result in malfunction.

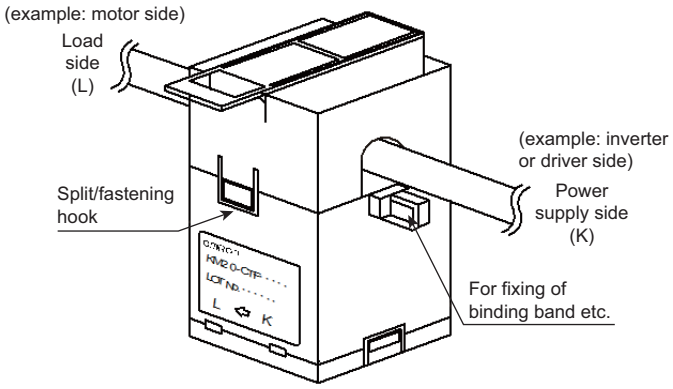

Dimensions

(Unit: mm)

K7DD

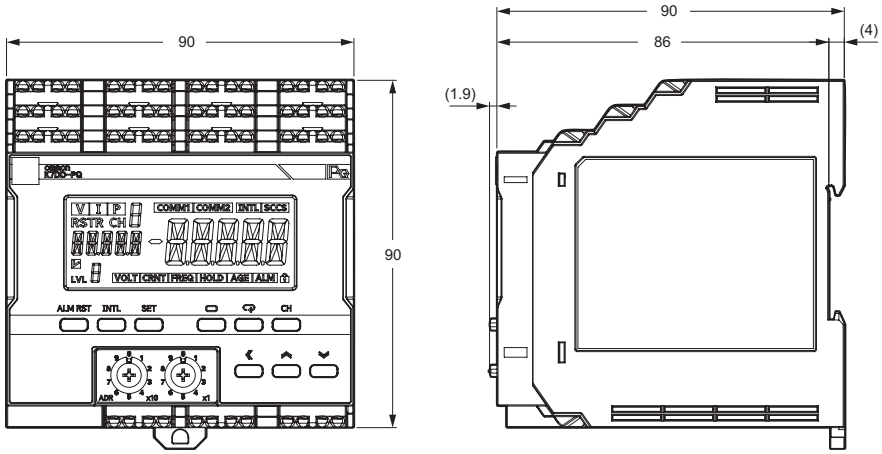

Special CT (Current Transformer)

K6CM-CICB005-C
K6CM-CICB005

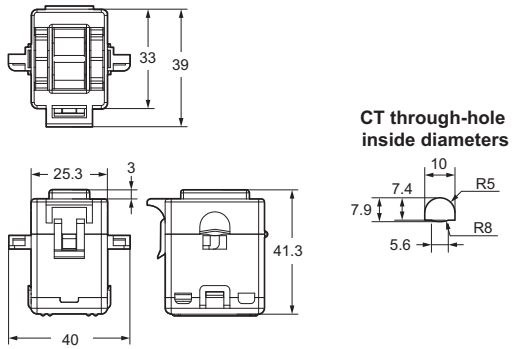

K6CM-CICB025-C
K6CM-CICB025

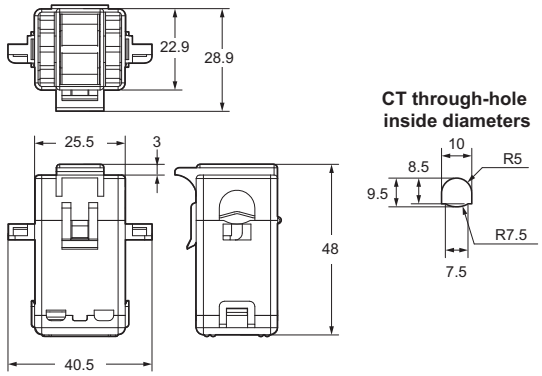

K6CM-CICB100-C
K6CM-CICB100

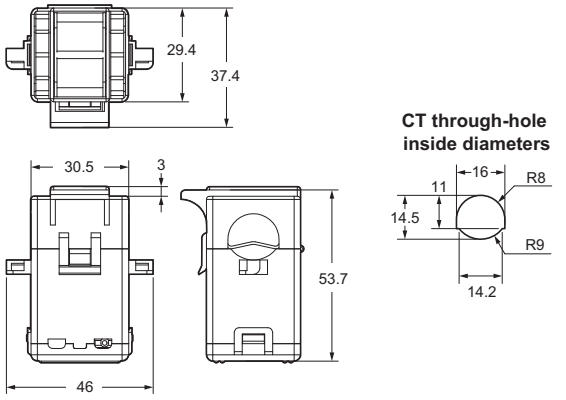

K6CM-CICB200-C
K6CM-CICB200

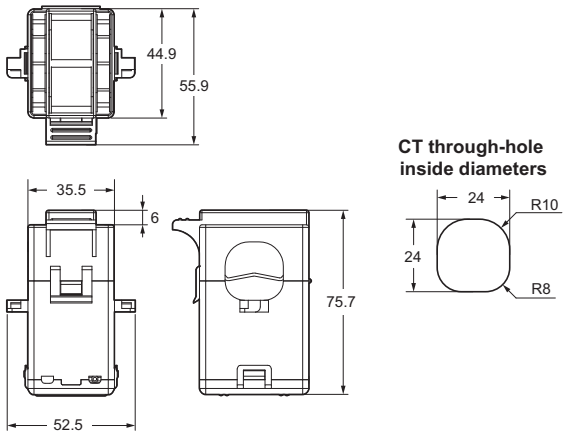

K6CM-CICB400-C
K6CM-CICB400

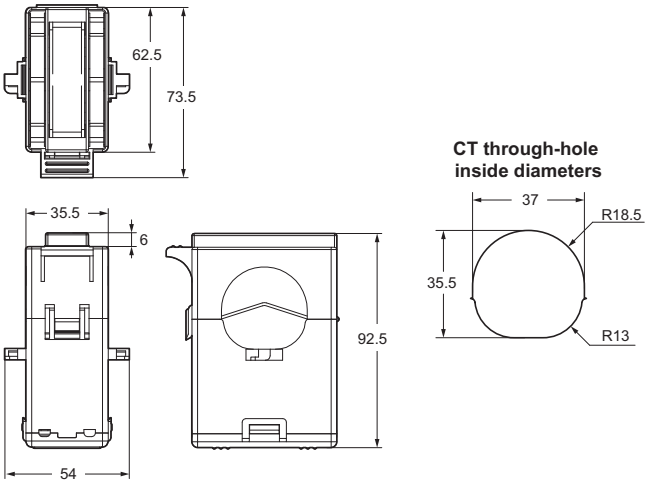

CT-supplied cable ✻

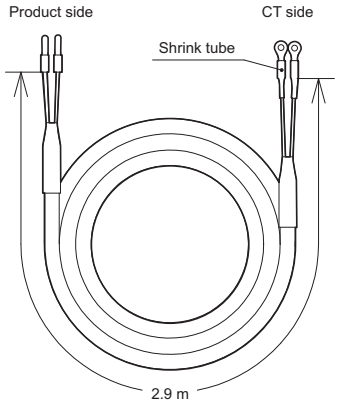

✻ The CT-supplied cable is attached to the CT.

Note: 1. The "-C" at the end of the special CTs refer to the models compliant with UL certification. Models without "-C" can also be used if UL certification is not required. The ratings and specifications are common to all of them.
2. To comply with UL certification for the special CT, refer to *Conformance to Safety Standards* (page 16).
3. The CT input terminals of the K7DD can be connected in either direction of the special CT regardless of polarity.

Optional Products for DIN Track Mounting

DIN Tracks

PFP-100N
PFP-50N

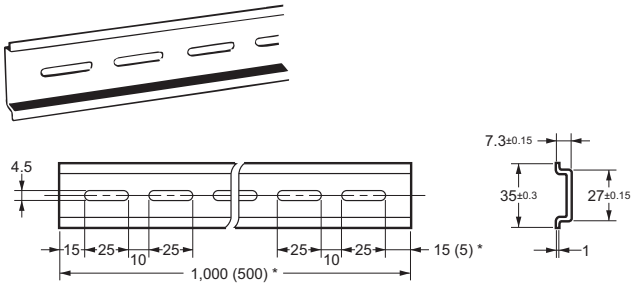

* Dimensions in parentheses are for the PFP-50N.

End Plate

PFP-M

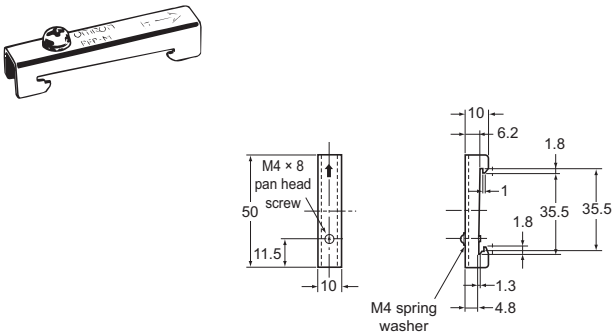

Parameters

Parameter Flow

This section shows the parameters displayed on the main display of the K7DD.

For details on communication dedicated parameters, refer to *7-7 Variable Area Map* in *Power Line Data Generator User's Manual* (N227).

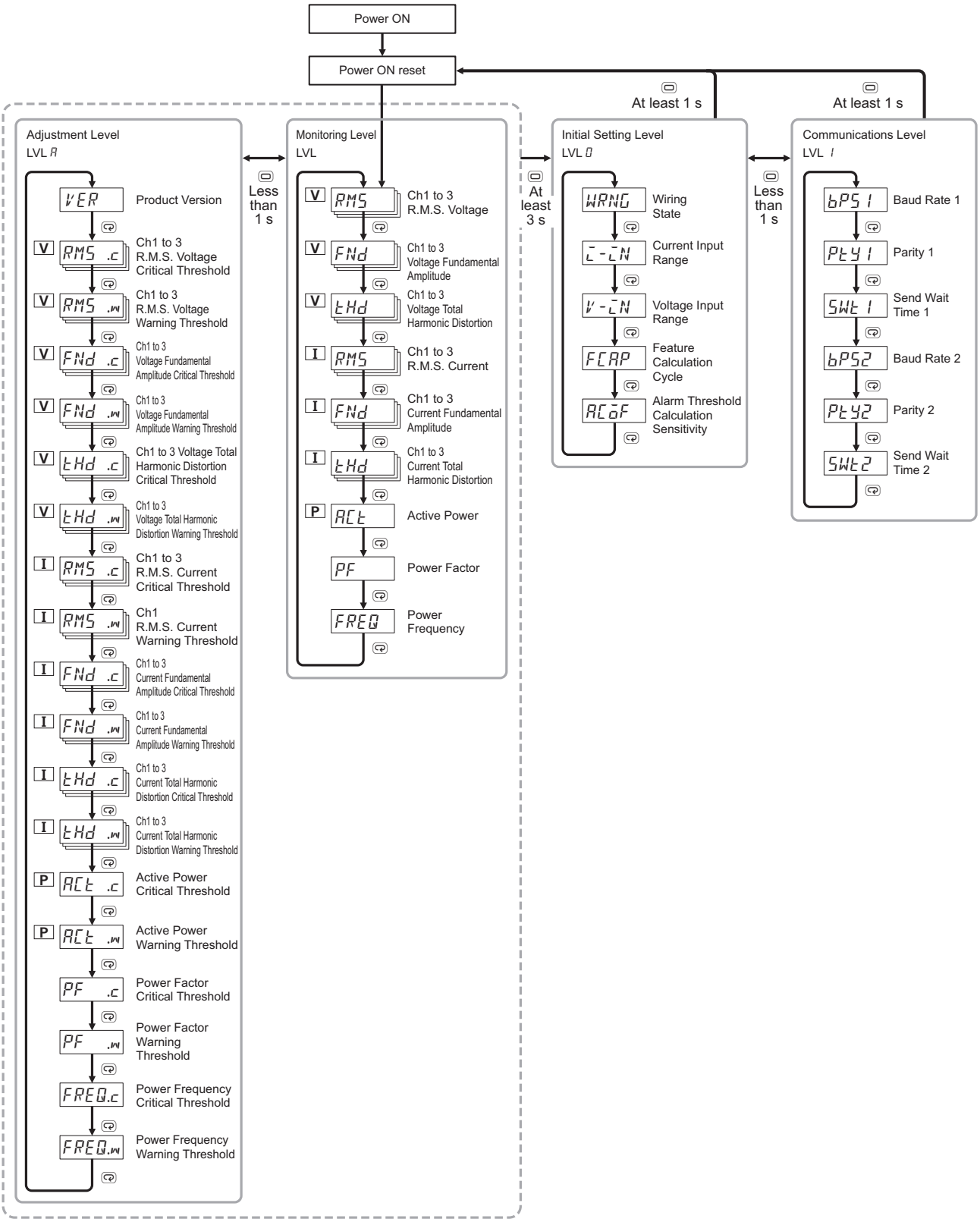

K7DD

Tool

The K7DD Support Tool is a tool for “configuration,” “adjustment,” “logging,” and “condition diagnosis” of the K7DD unit.
Using the K7DD Support Tool enables more precise setting than from the unit keys.
The functions of the support tool are as follows.

Function name	Description
All feature measurement and trigger measurement simulation	The K7DD can monitor 9 types of feature values on its display. In the Support Tool, all 142 types of feature values can be monitored. In addition, you can set the measurement timing while observing the waveform in trigger simulations.
Abnormal data registration	The Support Tool allows you to select abnormal data to register from among the following: • Device status data [Error]...Data measured by actually allowing an error to occur • Application Setting File...Abnormal data validated by OMRON beforehand • Measurement value stored in the K7DD...Data of the maximum and minimum values of each feature recorded in the K7DD monitoring operation
Feature selection support/ Alarm threshold setting support	This function automatically selects feature values effective for monitoring based on both normal and abnormal data, and also calculates thresholds at the same time.
Digital Maintenance Log	With this function, you can record the progress of each abnormality and the change rate of the feature values in the current device condition, for each of the pre-registered abnormal device conditions.
Arrival prediction	This function calculates the progress of an abnormality from the condition diagnosis results and helps predict when the error will reach the alarm level. This will assist the maintenance planning of the device.

Trigger measurement simulation

Alarm threshold setting support

Arrival prediction

Note: The above-shown pictures might be different from the actual ones.

● System requirements

Supported OS	Windows10 (Version 1607 or later)/11 (English or Japanese) 32-bit (Windows10 only)/64-bit edition
Computer specifications	CPU: 32-bit or 64 bit processor of 1 GHz or faster RAM: 1 GB or more, or 2 GB or more (for 64-bit processor) Reserved disk space: 16 GB or more, or 20 GB or more (for 64-bit processor) Monitor resolution: 1920 × 1080 Dependencies: .NET6 Others: LAN port for network connection

Connection configuration

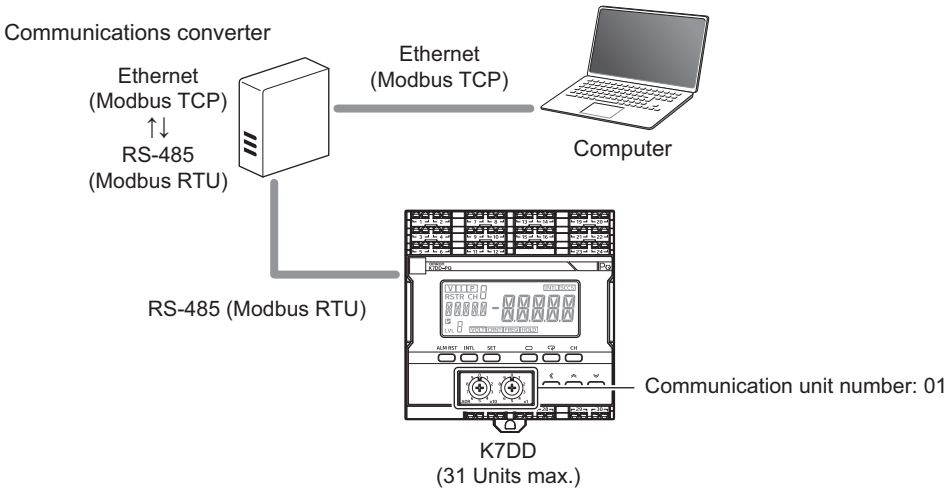

The K7DD Support Tool uses Ethernet (Modbus TCP) and the K7DD unit uses serial communications (Modbus RTU), so protocol conversion is performed using a communications converter.
When configuring the communications settings in the K7DD Support Tool, set a static IP address for the PC side (master) and a communications unit number for the K7DD unit (slave).
Use a commercially available product for the communications converter. OMRON performed an evaluation test on the MGateMB3170 manufactured by MOXA.

For details on the connection method of this tool, refer to the K7DD User's Manual.

You can download the latest version of this tool from the following OMRON website.
http://www.ia.omron.com/k7dd_tool

In the interest of product improvement, the tool specifications are subject to change without notice.

Conformance to Safety Standards

- The protection provided by the device may be impaired if the device is used in a manner that is not specified by the manufacturer.
- To use the Product, install it as an embedded device within a control panel.
- To use the special CT, install it in the same control panel as the Product with a sufficient clearance from other devices.
- For the special CT, use one with -C suffixed to the model.
- For the operation power supply and voltage inputs, use recommended fuses that are externally installed.
- Use the voltage and CT inputs under conditions specified for the measurement category.
- The maximum temperature of the terminal block is 65°C. Therefore, use wires with a rated temperature of 65°C or higher.
- For the wire passing through the primary side of the special CT, use an insulated wire with basic insulation or higher degree of insulation that complies with Table 1.
- Using Table 2 as a guideline, select such a wire as the case temperature of the special CT will be 65°C or less.

Table 1

	Measuring Voltage System Configurations		
	3-phase, 4-wire type (neutral point grounding)	3-phase, 3-wire type	Single-phase, 2-wire type
	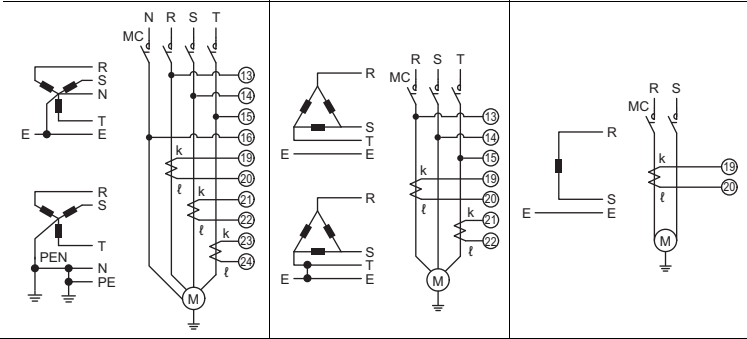		
CAT III	Phase voltage ≤ 150 V	Line voltage ≤ 150 V	
	Rated voltage and size of AWM wires: 150 V min. No size limit		
	Phase voltage > 150 ≤ 300 V	Line voltage > 150 ≤ 300 V	
	Rated voltage and size of AWM wires: 600 V min. 1 AWG min.		
CAT II	Phase voltage ≤ 150 V	Line voltage ≤ 150 V	
	Rated voltage and size of AWM wires: 150 V min. No size limit		
	Phase voltage > 150 ≤ 300 V	Line voltage > 150 ≤ 300 V	
	Rated voltage and size of AWM wires: 300 V min. No size limit		
	Phase voltage > 300 ≤ 347 V	Line voltage > 300 ≤ 480 V	
	Rated voltage and size of AWM wires: 600 V min. 1 AWG min.		

Table 2

Special CT model	Wire size	Ambient operating temperature of K7DD and special CT
K6CM-CICB005-C	24 AWG min. (0.25 mm^2 min.)	55°C max.
K6CM-CICB025-C	12 AWG min. (3.5 mm^2 min.)	55°C max.
K6CM-CICB100-C	4 AWG (22 mm^2)	45°C max.
	2 AWG (35 mm^2)	50°C max.
	1 AWG min. (50 mm^2 min.)	55°C max.
K6CM-CICB200-C	2/0 AWG (70 mm^2)	45°C max.
	3/0 AWG min. (95 mm^2 min.)	50°C max.
K6CM-CICB400-C	3/0 AWG min. x 2 wires (95 mm^2 min. x 2 wires)	40°C max.

Measurement category

The measurement category classifies the places and equipment which you can connect to the measurement terminals, as prescribed in EN/IEC 61010-2-030. Each category is as follows.

CAT II: Energy-consuming equipment with an energy supply from fixed wiring equipment (such as a power outlet)

CAT III: Equipment in fixed wiring equipment that particularly demands equipment reliability and effectiveness

CAT IV: Equipment to use at the electrical service entry

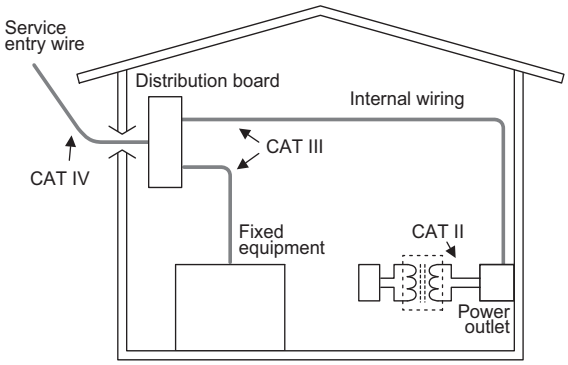

Microsoft, Windows, Excel, and Visual Basic are either registered trademarks or trademarks of Microsoft Corporation in the United States and other countries.
Modbus is a registered trademark or trademark of Schneider Electric USA, Inc. in Japan, the United States or other countries.
Other company names and product names in this document are the trademarks or registered trademarks of their respective companies.
Microsoft product screen shots reprinted with permission from Microsoft Corporation.
Some images are used under license from Shutterstock.com.

Comprehensive Current Diagnosis Type Technical Data (Reference)

Select a CT that matches the motor capacity.

CT type	Measurement range	Maximum measurement range	Applicable motor (200 VAC)	Applicable motor (400 VAC)
K6CM-CICB005	1.00 A to 5.00 A	1.00 A to 5.25 A	0.75 kW	1.5 kW to 2.2 kW
K6CM-CICB025	5.00 A to 25.00 A	5.00 A to 26.25 A	1.5 kW to 5.5 kW	3.7 kW to 11 kW
K6CM-CICB100	20 A to 100 A	20 A to 105 A	7.5 kW to 22 kW	15 kW to 45 kW
K6CM-CICB200	40 A to 200 A	40 A to 210 A	30 kW to 45 kW	55 kW to 90 kW
K6CM-CICB400	80 A to 400 A	80 A to 420 A	55 kW to 90 kW	110 kW to 200 kW
K6CM-CICB600	120 A to 600 A	120 A to 630 A	110 kW to 150 kW	250 kW to 300 kW

Note: At no load, the motor current is at approximately half rated load.
Select a CT that can cover the range of 50% to 100% of rated current.

Use the following expression when calculating the current value from the motor capacitance.

$$\text{Current value of motor (A)} = \frac{\text{Motor capacitance (kW)} \times 1000}{\text{Motor voltage (V)} \times \sqrt{3} \times \text{Power factor (0.9)} \times \text{Efficiency (0.8)}}$$

(Example) When a 5.5-kW motor is used at 200 V

$$\text{Current value of motor} = \frac{5.5 \times 1000}{200 \times \sqrt{3} \times 0.9 \times 0.8} = 22\ \text{A}$$

Therefore, the CT K6CM-CICB025 in which 22 A is within the measurement range is selected.
The measurement range is within 20 and 100 A even in the case of K6CM-CICB100, which means that 22 A is within the range and this model can also be used. However, during selection, priority must be given to a CT having a small rated current value in order to realize more accurate measurement.

Note: In the expression shown above, general values must be used for the power factor and efficiency, and the load factor must be 100%. However, depending on the actual operating environment, the actual current value and measured value may be different. If the CT is used at a current value that is below the lower-limit value of the measurement range of the CT, the measurement error of the degradation level will increase. Therefore, if possible, measure the current during a steady-state operation with a clamp meter, etc., and select a CT corresponding to the current value.

MEMO

Terms and Conditions Agreement

Read and understand this catalog.

Please read and understand this catalog before purchasing the products. Please consult your OMRON representative if you have any questions or comments.

Warranties.

(a) Exclusive Warranty. Omron's exclusive warranty is that the Products will be free from defects in materials and workmanship for a period of twelve months from the date of sale by Omron (or such other period expressed in writing by Omron). Omron disclaims all other warranties, express or implied.

(b) Limitations. OMRON MAKES NO WARRANTY OR REPRESENTATION, EXPRESS OR IMPLIED, ABOUT NON-INFRINGEMENT, MERCHANTABILITY OR FITNESS FOR A PARTICULAR PURPOSE OF THE PRODUCTS. BUYER ACKNOWLEDGES THAT IT ALONE HAS DETERMINED THAT THE PRODUCTS WILL SUITABLY MEET THE REQUIREMENTS OF THEIR INTENDED USE.

Omron further disclaims all warranties and responsibility of any type for claims or expenses based on infringement by the Products or otherwise of any intellectual property right. (c) Buyer Remedy. Omron's sole obligation hereunder shall be, at Omron's election, to (i) replace (in the form originally shipped with Buyer responsible for labor charges for removal or replacement thereof) the non-complying Product, (ii) repair the non-complying Product, or (iii) repay or credit Buyer an amount equal to the purchase price of the non-complying Product; provided that in no event shall Omron be responsible for warranty, repair, indemnity or any other claims or expenses regarding the Products unless Omron's analysis confirms that the Products were properly handled, stored, installed and maintained and not subject to contamination, abuse, misuse or inappropriate modification. Return of any Products by Buyer must be approved in writing by Omron before shipment. Omron Companies shall not be liable for the suitability or unsuitability or the results from the use of Products in combination with any electrical or electronic components, circuits, system assemblies or any other materials or substances or environments. Any advice, recommendations or information given orally or in writing, are not to be construed as an amendment or addition to the above warranty.

See http://www.omron.com/global/ or contact your Omron representative for published information.

Limitation on Liability; Etc.

OMRON COMPANIES SHALL NOT BE LIABLE FOR SPECIAL, INDIRECT, INCIDENTAL, OR CONSEQUENTIAL DAMAGES, LOSS OF PROFITS OR PRODUCTION OR COMMERCIAL LOSS IN ANY WAY CONNECTED WITH THE PRODUCTS, WHETHER SUCH CLAIM IS BASED IN CONTRACT, WARRANTY, NEGLIGENCE OR STRICT LIABILITY.

Further, in no event shall liability of Omron Companies exceed the individual price of the Product on which liability is asserted.

Suitability of Use.

Omron Companies shall not be responsible for conformity with any standards, codes or regulations which apply to the combination of the Product in the Buyer's application or use of the Product. At Buyer's request, Omron will provide applicable third party certification documents identifying ratings and limitations of use which apply to the Product. This information by itself is not sufficient for a complete determination of the suitability of the Product in combination with the end product, machine, system, or other application or use. Buyer shall be solely responsible for determining appropriateness of the particular Product with respect to Buyer's application, product or system. Buyer shall take application responsibility in all cases.

NEVER USE THE PRODUCT FOR AN APPLICATION INVOLVING SERIOUS RISK TO LIFE OR PROPERTY OR IN LARGE QUANTITIES WITHOUT ENSURING THAT THE SYSTEM AS A WHOLE HAS BEEN DESIGNED TO ADDRESS THE RISKS, AND THAT THE OMRON PRODUCT(S) IS PROPERLY RATED AND INSTALLED FOR THE INTENDED USE WITHIN THE OVERALL EQUIPMENT OR SYSTEM.

Programmable Products.

Omron Companies shall not be responsible for the user's programming of a programmable Product, or any consequence thereof.

Performance Data.

Data presented in Omron Company websites, catalogs and other materials is provided as a guide for the user in determining suitability and does not constitute a warranty. It may represent the result of Omron's test conditions, and the user must correlate it to actual application requirements. Actual performance is subject to the Omron's Warranty and Limitations of Liability.

Change in Specifications.

Product specifications and accessories may be changed at any time based on improvements and other reasons. It is our practice to change part numbers when published ratings or features are changed, or when significant construction changes are made. However, some specifications of the Product may be changed without any notice. When in doubt, special part numbers may be assigned to fix or establish key specifications for your application. Please consult with your Omron's representative at any time to confirm actual specifications of purchased Product.

Errors and Omissions.

Information presented by Omron Companies has been checked and is believed to be accurate; however, no responsibility is assumed for clerical, typographical or proofreading errors or omissions.

OMRON AUTOMATION AMERICAS HEADQUARTERS • Chicago, IL USA • 847.843.7900 • 800.556.6766 • automation.omron.com

OMRON CANADA, INC. • HEAD OFFICE
Toronto, ON, Canada • 416.286.6465 • 866.986.6766 • automation.omron.com

OMRON MEXICO • HEAD OFFICE
Ciudad de México • 52.55.5901.4300 • 01.800.386.6766 • mela@omron.com

OMRON ELETRÔNICA DO BRASIL LTDA • HEAD OFFICE
São Paulo, SP, Brasil • 55 11 5171-8920 • automation.omron.com

OMRON ARGENTINA • SALES OFFICE
Buenos Aires, Argentina • +54.11.4521.8630 • +54.11.4523.8483
mela@omron.com

OTHER OMRON LATIN AMERICA SALES
+54.11.4521.8630 • +54.11.4523.8483 • mela@omron.com

Authorized Distributor:

Controllers & I/O
• Machine Automation Controllers (MAC) • Motion Controllers
• Programmable Logic Controllers (PLC) • Temperature Controllers • Remote I/O

Robotics
• Industrial Robots • Mobile Robots

Operator Interfaces
• Human Machine Interface (HMI)

Motion & Drives
• Machine Automation Controllers (MAC) • Motion Controllers • Servo Systems
• Frequency Inverters

Vision, Measurement & Identification
• Vision Sensors & Systems • Measurement Sensors • Auto Identification Systems

Sensing
• Photoelectric Sensors • Fiber-Optic Sensors • Proximity Sensors
• Rotary Encoders • Ultrasonic Sensors

Safety
• Safety Light Curtains • Safety Laser Scanners • Programmable Safety Systems
• Safety Mats and Edges • Safety Door Switches • Emergency Stop Devices
• Safety Switches & Operator Controls • Safety Monitoring/Force-guided Relays

Control Components
• Power Supplies • Timers • Counters • Programmable Relays
• Digital Panel Meters • Monitoring Products

Switches & Relays
• Limit Switches • Pushbutton Switches • Electromechanical Relays
• Solid State Relays

Software
• Programming & Configuration • Runtime

Note: Specifications are subject to change.

© 2023 Omron. All Rights Reserved.

Printed in U.S.A.