Smart Laser Micrometer

ZX-GT

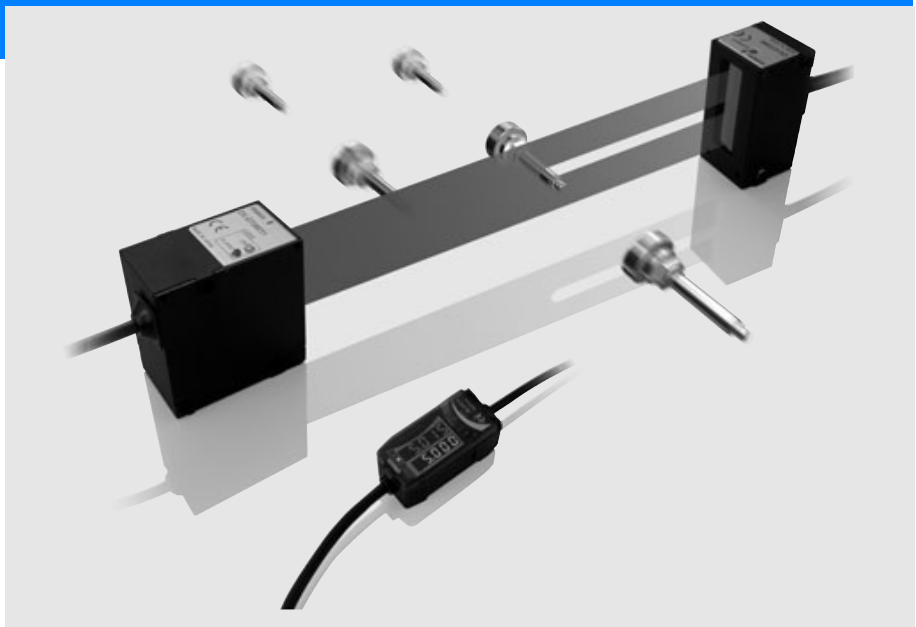

- High accuracy: 5-10 µm
- All surfaces
- Long sensing distance: < 500 mm
- Line width up to 28 mm
- Calculation unit for multiple heads
- Fast sampling time: 0.5 ms
- PC software for setup

Ordering Information

Sensors

Appearance	Optical system	Measuring width	Sensing distance	Resolution	Output type	Model
Separate type 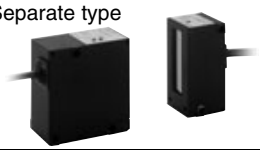	Through-beam	28 mm	0 to 500 mm	10 µm	NPN	ZX-GT28S11
					PNP	ZX-GT28S41
Integrated type 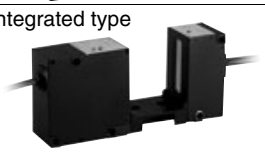			40 mm		NPN	ZX-GT2840S11
					PNP	ZX-GT2840S41

Controller

Appearance	Power supply	Output type	Model
	DC	NPN	ZX-GTC11
		PNP	ZX-GTC41

Accessories (Order Separately)

Set of Interface Unit and Setup software PCs

Output type	Model
NPN	ZX-GIF11A
PNP	ZX-GIF41A

Interface Unit(RS-232C/Binary output)

Appearance	Power supply	Output type	Model
	DC	NPN	ZX-GIF11
		PNP	ZX-GIF41

Setup software PCs

Name	Model
Smart Monitor GT	ZX-GSW11

Calculating Units

Appearance	Model
	ZX-CAL2

Receiver-Controller Extension Cable

Cable length	Model		Quantity
	Standard cable	Flexible cable	
1 m	ZX-XGC1A	ZX-XGC1R	1 m
2 m	ZX-XGC2A	ZX-XGC2R	
5 m	ZX-XGC5A	ZX-XGC5R	
8 m	ZX-XGC8A	ZX-XGC8R	
20 m	ZX-XGC20A	ZX-XGC20R	

Up to two extension cables can be connected. However, be sure to limit the total extension cable length between the receiver and the Controller to 30 meters (including the receiver cable).

Specifications

Sensor

Item	ZX-GT28S11	ZX-GT2840S11	ZX-GT28S41	ZX-GT2840S41
Output type	NPN		PNP	
Appearance	Separate type	Integrated type	Separate type	Integrated type
Light source	Visible semiconductor laser diode (wavelength 650 nm, CLASS 1 of EN60825-1/IEC60825-1, CLASS of FDA(21CFR 1040.10 and 1040.11)			
Measuring width	28 mm			
Sensing distance	0 to 500 mm	40 mm	0 to 500 mm	40 mm
Minimum sensing object	0.5mm dia.(*1)	0.2 mm dia.	0.5 mm dia.(*1)	0.2 mm dia.
Linearity	±0.1%F.S.(*2)			
Resolution	10 µm (number of process values to average: 16)(*3)			
Temperature characteristic	±0.01%F.S/C(*4)			
Indicators (emitter)	Laser ON indicator (green), laser alarm indicator (red)			
Indicator (receiver)	Optical axis setting indicator (green)			
Laser OFF input/sync input	ON: Short-circuited with 0 V or 1.5 V max. OFF: Open (leakage current: 0.1 mA max.)		ON: Short-circuited with power supply voltage or power supply voltage -1.5 V max. OFF: Open (leakage current: 0.1 mA max.)	
Laser deterioration alarm output	NPN open-collector output 30 VDC 20 mA max. Residual voltage 1.2 V max.		PNP open-collector output 30 VDC 20 mA max. Residual voltage 2 V max.	
Power consumption (emitter)	30 mA max.			
Power supply voltage (emitter)	24 VDC +10%, -15% ripple (p-p) 10% max.			
Dielectric strength	1,000 VAC, 50/60 Hz for 1 min			
Insulation resistance	20 MΩ (at 500 VDC megger)			
Operating ambient illumination (emitter)	3,000 lx (incandescent light)			
Operating ambient illumination (receiver)	1,000 lx (incandescent light)(*5)			
Ambient temperature	Operating: 0 to +40°C Storage: -15 to +50°C(with no icing or condensation)			
Ambient humidity	Operating and storage: 35 to 85% (with no condensation)			
Vibration resistance (durability)	10 to 150 Hz Single-amplitude: 0.75 mm for 80 min each in X, Y and Z directions			
Degree of protection	IEC60529 IP40			
Cable length	2 m			
Material	Case: aluminum die-cast, Lens: glass			
Weight (packed state)	Approx. 550 g	Approx. 570 g	Approx. 550 g	Approx. 570 g
Accessories	Laser warning labels, Instruction Sheet			

F.S.: 28 mm measuring range of receiver

*1: Distance between emitter and receiver: 500 mm, measurement object at 250 mm from receiver. Glass ends of chamfer 0.1 mm or more can be detected in glass edge measurement mode. (at binary level 70%)

*2: Linearity is given to be a typical error with respect to an ideal straight line when the distance between the emitter and receiver is 100 mm and light is blocked at a distance of 50 mm from the receiver. (On the ZX-GT2840□□, the measurement object is measured at a distance of 20 mm from the receiver.)

*3: The amount of fluctuation (±3σ) in the analog output when the distance between the emitter and receiver is 100 mm and a ZX-GTC□□ is connected

*4: Change in the light cutoff value on one side when the distance between the emitter and receiver is 100 mm and the light is half-cutoff at a distance of 50 mm from the receiver (On the ZX-GT2840□□, the measurement object is measured at a distance of 20 mm from the receiver.)

*5: Standard mode (NORM) used

Controller

Item		ZX-GTC11	ZX-GTC41
Output type		NPN	PNP
Measurement cycle(*1)		1.5 ms (standard mode (NORM)) 0.5 ms (high-speed mode (FAST))(*2)	
Samples to average		1/2/4/8/16/32/64/128/256/512/1024/2048/4096	
Analog output(*3)		For current output: 4 to 20 mA/F.S., max. load resistance 300 Ω For voltage output: ±4 V, (±5 V, 1 to 5 V(*4)), output impedance 100 Ω	
Timing input, bank switching input, zero reset input, reset input		ON: short-circuited with 0V or 1.5V max. OFF: Open (leakage current: 0.1 mA max.)	ON: short-circuited with power supply voltage or power supply voltage -1.5V max. OFF: Open (leakage current: 0.1 mA max.)
HIGH/PASS/LOW Judgment output(*5) Sync output(*6)		NPN open-collector output 30 VDC 50 mA max. Residual voltage 1.2 V max.	PNP open-collector output 30 VDC 50 mA max. Residual voltage 2 V max.
Indicator		Judgment output indicator: HIGH (orange), PASS (green), LOW (orange) Main display (red) Sub-display (yellow) Bank 1/2 (orange), zero reset (green)	
Main functions	Number of registered setups	2 banks	
	Measurement Mode	Interrupted beam width measurement, incident beam width measurement, outer diameter measurement, center position measurement, IC lead pitch, IC lead width judgment, specified edge measurement, wire position measurement, glass edge position measurement	
	Display during measurement	Measured value, resolution, threshold, voltage output value, current output value (number of display digits can be changed)	
	Zero reset functions	Offset setting of zero reset value, zero reset value memory	
	Hold	Sample hold, peak hold, bottom hold, peak-to-peak hold, average hold, delay hold	
	Timer functions	ON delay, OFF delay, one-shot	
	Adjustment functions	Optical Axis adjust mode/light intensityt writing mode, variable binary level, variable edge filter, analog output scaling	
	Calculation	2 Possible on up to two Controllers (Calculation Unit ZX-CAL2 is required for connecting Controllers to each other.) A-B, A+B, width	
	Other	Measurement cycle setting, threshold setting, hysteresis setting, initialization, key lock	
Temperature characteristic		±0.005%F.S./°C	
Current consumption		150 mA max. (including receiver)	
Power supply voltage		24 VDC +10%, -15% ripple (p-p) 10% max.	
Dielectric strength		1,000 VAC, 50/60 Hz for min	
Insulation resistance		20 MΩ (at 500 VDC megger)	
Ambient temperature		Operating: 0 to +50°C Storage: -15 to +60°C (with no icing or condensation)	
Ambient humidity		Operating and storage: 35 to 85% (with no condensation)	
Vibration resistance(durability)		10 to 150 Hz Single-amplitude: 0.35 mm for 80 min each in X, Y and Z directions	
Degree of protection		IEC60529 IP20	
Cable length		2 m	
Material		Case: PBT (polybutylene terephthalate), Cover: Polycarbonate	
Weight (packed state)		Approx. 330 g	
Accessories		Instruction Sheet	

*1: The first response time is "measurement cycle x (number of samples to average setting + 1) + 1 ms" max. For the second response time onwards, the specified measurement cycle time is output.
*2: The response time in the high-speed mode (FAST) for the IC lead pitch and IC lead width judgment modes is 1 ms.
*3: Current/voltage can be switched using the switch provided on the rear of the Controller.
*4: Can be set by the analog output scaling function.
*5: The error (ERR) state is displayed when all HIGH/PASS/LOW outputs turn OFF.
*6: Normally, wire the sync output wire directly to the emitter's sync input wire and run the Controller in the standard mode. On an NPN type Controller, use an NPN type emitter, and on a PNP type Controller, use a PNP type emitter. Wiring of the sync wires is not required when the Controller is run in the high-speed mode.
(Note, however, that the Controller becomes more susceptible to the influence of ambient light in this case.)

Interface Unit

Item	ZX-GIF11/-GIF11A	ZX-GIF41/-GIF41A
Compatible Controller	ZX-GTC11	ZX-GTC41
Indicator	Power ON (green), Controller communications (orange), Controller communications error (red), RS-232C communications (orange), RS-232C communications error (red), binary output (orange)	
Communications port	RS-232C (9-pin D-sub connector)	
12-bit binary output (D11 toD0, GATE)	NPN open-collector output 30 VDC 20 mA max. Residual voltage 1.2 V max.	PNP open-collector output 30 VDC 20 mA max. Residual voltage 2 V max.
Power supply voltage	Supplied from Controller (power consumption: 60 mA max.)	
Dielectric strength	1,000 VAC, 50/60 Hz for 1 min	
Insulation resistance	20 MΩ (at 500 VDC megger)	
Ambient temperature	Operating: 0 to +50°C Storage: -15 to +60°C (with no icing or condensation)	
Ambient humidity	Operating and storage: 35 to 85% (with no condensation)	
Vibration resistance(durability)	10 to 150 Hz Single-amplitude: 0.35 mm for 80 min each in X, Y and Z directions	
Degree of protection	IEC60529 IP20	
Cable length	RS-232C 0.5 m, binary output 2 m	
Material	Case: PBT (polybutylene terephthalate), Cover: Polycarbonate	
Weight (packed state)	ZX-GIF□1A: Approx. 550 g ZX-GIF□1: Approx. 330 g	
Accessories	ZX-GIF□1A: Setup Software (CD-ROM), 2 clamps, Instruction Sheet ZX-GIF□1: 2 clamps, Instruction Sheet	

Dimensions

Sensor

Separate type: ZX-GT28S11/-GT28S41

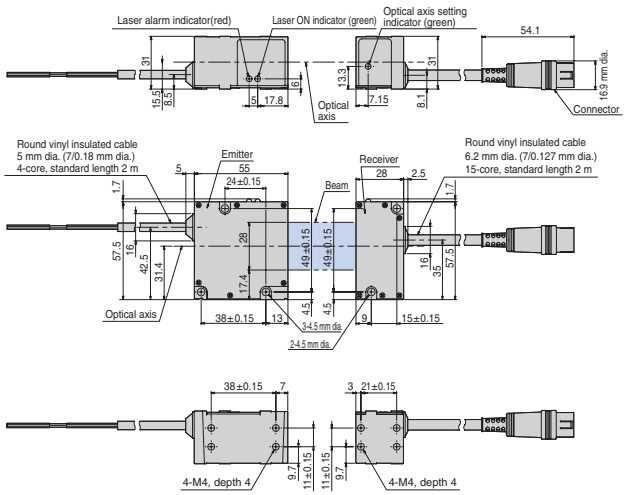

Integrated type: ZX-GT2840S11/-GT2840S41

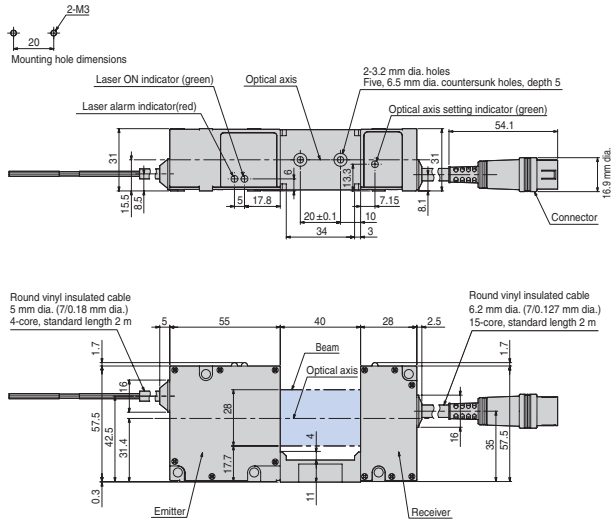

Controller

ZX-GTC11/-GTC41

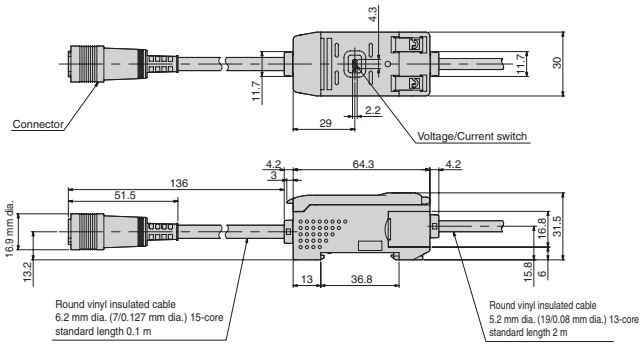

Calculating unit

ZX-GIF11/-GIF41

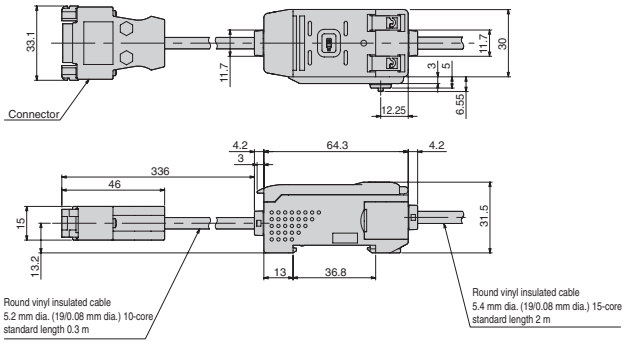

Interface unit

ZX-CAL2

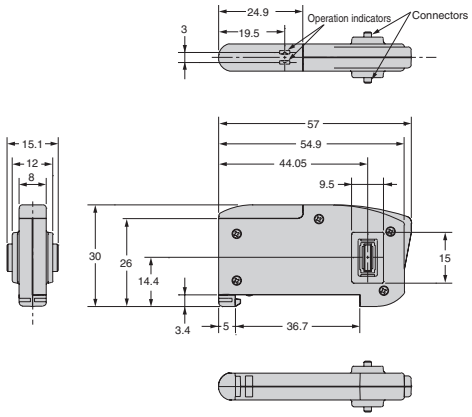

Receiver-controller extension cable

ZX-XGC□A/-XGC□R

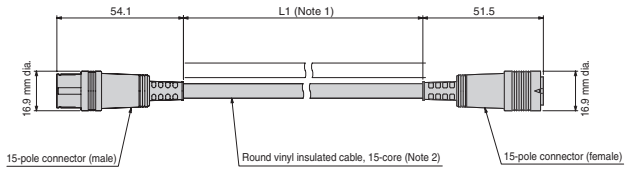

Note 1: ZX-XGC1A/R : 1M
ZX-XGC2A/R : 2M
ZX-XGC5A/R : 5M
ZX-XGC8A/R : 8M
ZX-XGC20A/R : 20M

Note 2: Standard cable: 6.2 mm dia.
Flexible cable: 6.1 mm dia.

OMRON

OMRON ELECTRONICS LLC • THE AMERICAS HEADQUARTERS
Schaumburg, IL USA • 847.843.7900 • 800.556.6766 • www.omron247.com

OMRON CANADA, INC. • HEAD OFFICE
Toronto, ON, Canada • 416.286.6465 • 866.986.6766 • www.omron.ca

OMRON ELETRÔNICA DO BRASIL LTDA • HEAD OFFICE
São Paulo, SP, Brasil • 55.11.2101.6300 • www.omron.com.br

OMRON ELECTRONICS MEXICO SA DE CV • HEAD OFFICE
Apodaca, N.L. • 52.811.156.99.10 • 001.800.556.6766 • mela@omron.com

OMRON ARGENTINA • SALES OFFICE
Cono Sur • 54.11.4783.5300

OMRON CHILE • SALES OFFICE
Santiago 56.9.9917.3920

OTHER OMRON LATIN AMERICA SALES
54.11.4783.5300

ALL DIMENSIONS SHOWN ARE IN MILLIMETERS.
To convert millimeters into inches, multiply by 0.03937. To convert grams into ounces, multiply by 0.03527.

Cat. No. Q20E-EN-01

In the interest of product improvement, specifications are subject to change without notice.