Programmable Multi-Axis Controller CK3M-series CPU Unit

CK3M-CPU1□1

CSM_CK3M-CPU1_1_DS_E_DITA_2_1

Multi-axis control with a fastest servo cycle time of 50 µs/5 axes enables precision machining



CK3M-CPU1□1

Features

- Up to 16 axes can be controlled by analog commands using four CK3W-AX□□□□□ Axial Interface Units and an expansion rack
- The CK3M-CPU121 controls up to eight EtherCAT servo drives
- G-Code/ANSI C/original programming language
- EtherCAT slaves including vision and I/O can be connected
- Compact design (1/3 the size of conventional models*1)
- The EtherCAT network reduces wiring and machine size

*1. Compared with UMAC from OMRON's Delta Tau Data Systems, Inc.

EtherCAT® is a registered trademark and patented technology, licensed by Beckhoff Automation GmbH, Germany.
Other company names and product names in this document are the trademarks or registered trademarks of their respective companies.
The product photographs and figures that are used in this catalog may vary somewhat from the actual products.
PMAC is an abbreviation for Programmable Multi Axis Controller.

System Configurations

Basic System Configuration

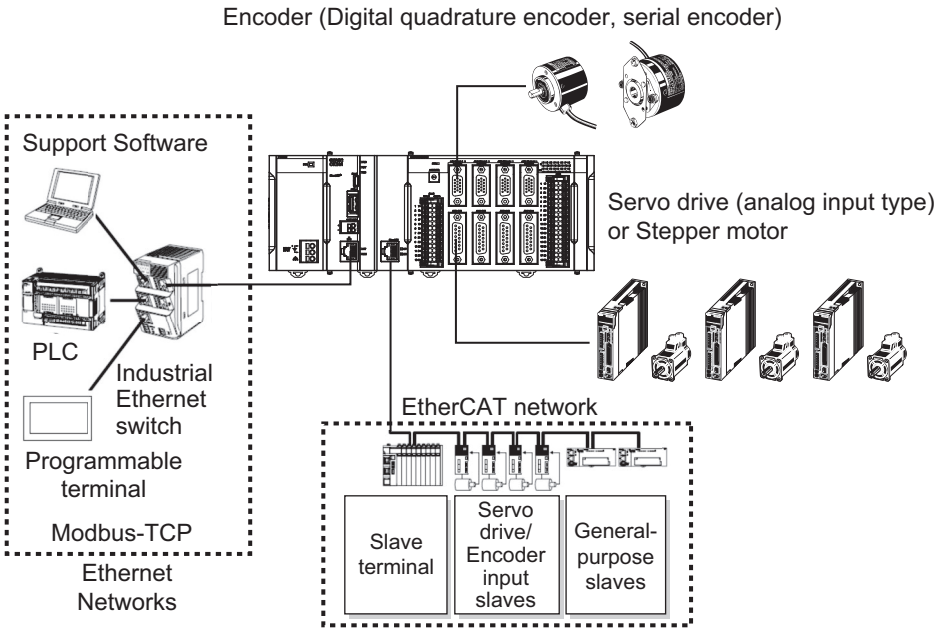

CK3W Unit Configuration (CPU Rack/Expansion Rack)

The following shows the configuration of CK3W Units.

CPU Rack

The CK3W Unit configuration in the CPU Rack consists of a Power Supply Unit, CPU Unit, CK3W-AX Unit, CK3W-MD Unit, CK3W-AD Unit, and End Cover.
Up to four CK3W Units (or up to two CK3W-AX Units) can be connected to the CPU Unit.

Expansion Rack

One Expansion Rack can be connected per CPU Unit.
To connect an Expansion Rack, use the Expansion Master Unit (CK3W-EXM01) and Expansion Slave Unit (CK3W-EXS02).
Up to four CK3W Units (or up to two CK3W-AX Units) can be installed to the Expansion Rack.
Connect the Expansion Master Unit (CK3W-EXM01) adjacent to the right side of the CPU Unit. Connect the Expansion Slave Unit (CK3W-EXS02) adjacent to the right side of the Power Supply Unit.
Unless the Expansion Master Unit (CK3W-EXM01) is connected adjacent to the right side of the CPU Unit, the Sys.Status register CK3WConfigErr becomes “5”.

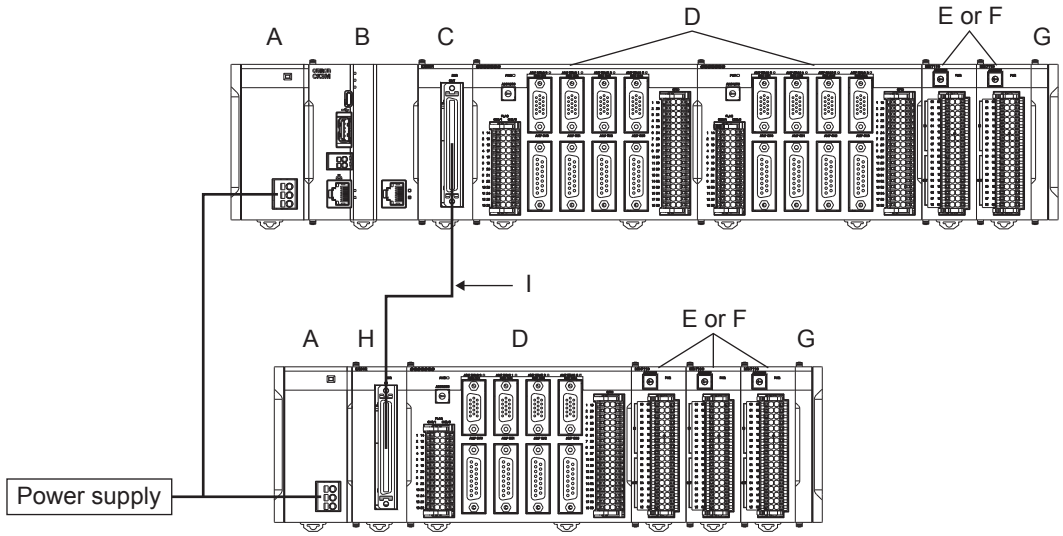

Letter	Configuration	Remarks
A	Power Supply Unit	Input the 24 V power source. Always wire the CPU Rack and Expansion Rack to the same power supply.
B	CK3M-series CPU Unit	This is the Unit at the center of the motion control, which executes the motion program.
C	CK3W-EXM01	Expansion Master Unit. Connect this Unit adjacent to the right side of the CPU Unit in the Expansion Rack.
D	CK3W-AX Unit	Axis Interface Unit. For axis control, connect this to a Servo Drive and encoder.
E	CK3W-MD Unit	Digital I/O Unit. You can add 16 digital inputs and 16 digital outputs.

Letter	Configuration	Remarks
F	CK3W-AD Unit	Analog Input Unit. You can add 4 or 8 voltage inputs.
G	End Cover	Must be connected to the right end of the CPU Rack and Expansion Rack. The CPU Unit and the Expansion Slave Unit are each provided with one End Cover.
H	CK3W-EXS02	Expansion Slave Unit. Use this in the Expansion Rack. Connect this Unit adjacent to the right side of the Power Supply Unit.
I	Expansion cable	Use this cable to connect the Expansion Master Unit and the Expansion Slave Unit. The cable length is 30 cm. Be sure to use the CK3W-CAX003A (30 cm) cable.

EtherCAT Network Configuration

The EtherCAT network configuration consists of a Power Supply Unit, CPU Unit, End Cover, and EtherCAT slaves.
Use the built-in EtherCAT port on the CK3M-series CPU Unit to connect EtherCAT slaves.

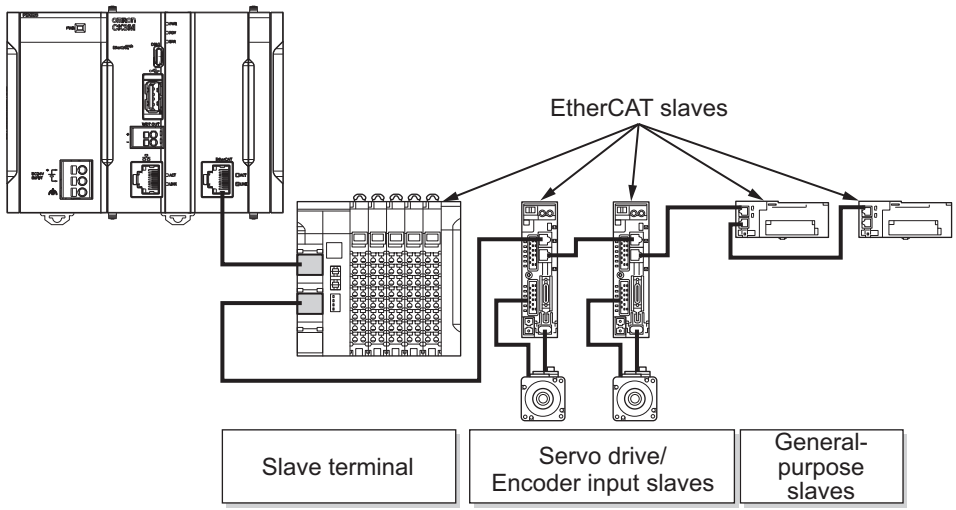

EtherCAT is synchronized with the servo cycle of the CK3M-series CPU Unit. This enables acquisition of the I/O data of slave terminals that are synchronized with the servo cycle.

Network Configuration

Connecting to the Power PMAC IDE

Connect the CK3M-series CPU Unit and the Power PMAC IDE through Ethernet.

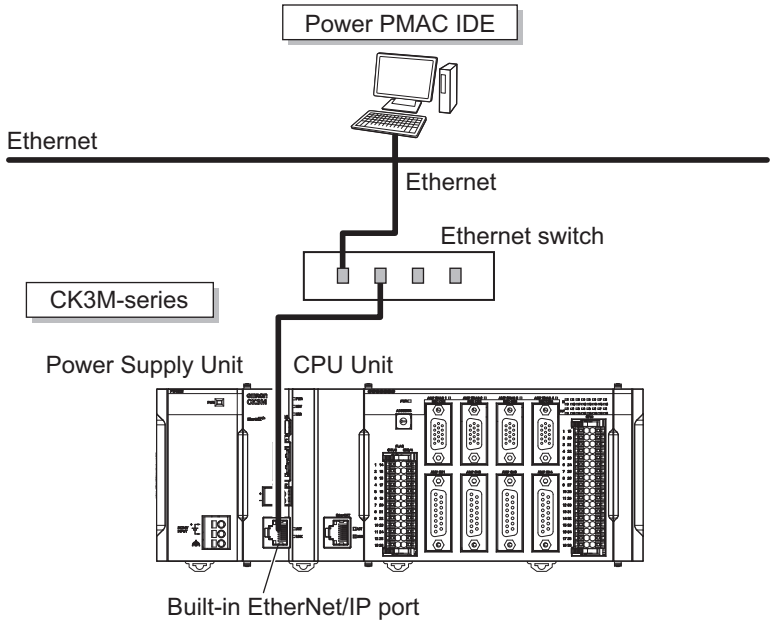

Ethernet Network Configuration

The Ethernet communications port on the CK3M-series CPU Unit supports the Modbus-TCP protocol.
It can be connected to devices such as PLCs and programmable terminals that support the Modbus-TCP protocol.

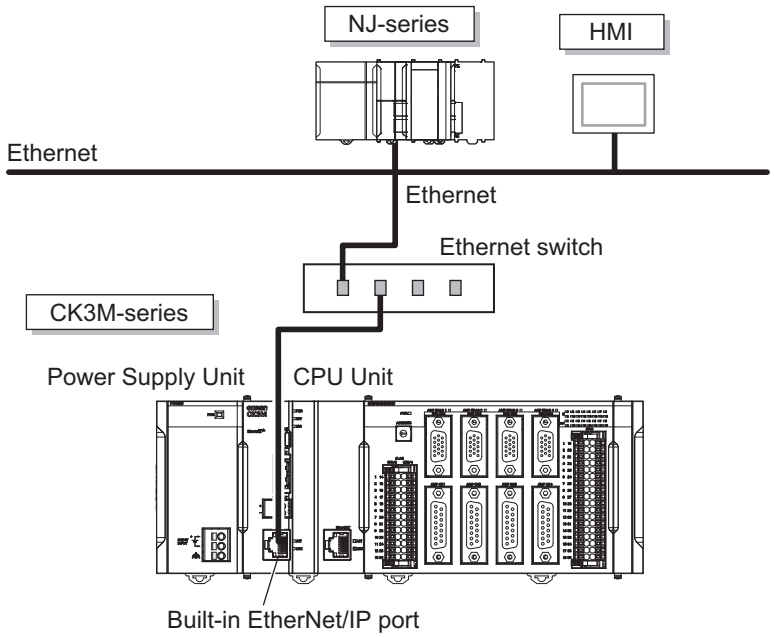

Ordering Information

CK3M CPU Unit

The models and outline of specifications are given below.

Product name	Memory capacity	EtherCAT port	Max. no. of controlled axes at EtherCAT port	Model
CPU Unit *1	RAM: 1 GB Built-In flash memory: 1 GB	None	-	**CK3M-CPU101**
		EtherCAT: 1 port (DC sync)	4	**CK3M-CPU111**
		EtherCAT: 1 port (DC sync)	8	**CK3M-CPU121**

*1. One CK3W-TER11 End Cover is provided with the CK3M-CPU1□1 CPU Unit.

Support Software

The following table shows the Support Software used to configure, monitor, program, and debug the Motion Controller.

Configuration software		Application	How to Procure
Power PMAC IDE *1		This computer software is used to configure the Motion Controller, create user programs, and debug the programs.	This is free software. *2
Power PMAC-NC16	**Power PMAC-NC16 SDK**	This computer software is used to control working machines and other CNC machines with the Motion Controller. Use this software to customize HMI screens. The product contains extension source codes for customization.	This is non-free software. *2
	Power PMAC-NC16 Runtime	This computer software is used to control working machines and other CNC machines with the Motion Controller. Use this software when you do not customize HMI screens.	This is non-free software. *2

*1. Refer to Version Information->Page 12 for the supported Power PMAC IDE versions.
*2. Contact your OMRON representative for information on how to procure.

Power Supply Units

The models and outline of specifications are given below.

Product name	Specifications	Model
Power Supply Unit	Rated output voltage: 5 VDC/24 VDC Maximum output power: 5 VDC 23 W, 24 VDC 66 W	**CK3W-PD048**

Axial Interface Units

The models and outline of specifications are given below.

Product name	Amplifier interface	Encoder interface	Output type	Model
Axis Interface Unit	DirectPWM output	Digital quadrature encoder/serial encoder	NPN type	**CK3W-AX1313N**
	DA output (Filtered PWM)			**CK3W-AX1414N**
	DA output (True DAC)			**CK3W-AX1515N**
	DirectPWM output	Sinusoidal encoder/serial encoder		**CK3W-AX2323N**
	DirectPWM output	Digital quadrature encoder/serial encoder	PNP type	**CK3W-AX1313P**
	DA output (Filtered PWM)			**CK3W-AX1414P**
	DA output (True DAC)			**CK3W-AX1515P**
	DirectPWM output	Sinusoidal encoder/serial encoder		**CK3W-AX2323P**

Digital I/O Units

Product name	Number of inputs	Number of outputs	I/O type	Model
Digital I/O Unit	16	16	NPN	**CK3W-MD7110**
			PNP	**CK3W-MD7120**

Analog Input Units

Product name	Input range	Number of inputs	Model
Analog Input Unit	-10 to 10 V	4	**CK3W-AD2100**
		8	**CK3W-AD3100**

Expansion Master Units and Expansion Slave Units

Product name	Description	Model
Expansion Master Unit	Connect the Expansion Master Unit adjacent to the right side of the CPU unit	**CK3W-EXM01**
Expansion Slave Unit *1	Connect the Expansion Slave Unit adjacent to the right side of the power supply unit	**CK3W-EXS02**
Expansion Cable	For connection between the Expansion Master Unit and the Expansion Slave Unit (0.3 m)	**CK3W-CAX003A**

*1. One CK3W-TER11 End Cover is provided with the CK3W-EXS02 Expansion Slave Unit.

EtherCAT Coupler Units

You can use NX Units via the EtherCAT Coupler Unit that is connected to the built-in EtherCAT port on the CPU Unit.

Product name	Communications cycle in DC Mode	Current consumption	Max. I/O power supply current	Model
EtherCAT Coupler Unit *1 	125 to 10,000 μs *2	1.25 W max.	10 A	**NX-ECC203**

*1. One NX-END01 End Cover is provided with the EtherCAT Coupler Unit.
*2. This depends on the specifications of the EtherCAT master.

Switching Hubs

Product name	Specification	Manufacturer	Model
Industrial Switching Hub	3 ports. Current consumption: 0.22 A Power supply connector included	OMRON Corporation	**W4S1-03B**
	5 ports. Current consumption: 0.22 A Power supply connector included		**W4S1-05B**
	5 ports. Current consumption: 0.22 A Failure detection Power supply connector and connector for informing error included		**W4S1-05C**
	Contact the manufacturer.	Cisco Systems, Inc.	-
	Contact the manufacturer.	CONTEC Co., Ltd.	-
	Contact the manufacturer.	PHOENIX CONTACT	-

Recommended EtherCAT and Ethernet Communications Cables

Use a straight STP (shielded twisted-pair) cable of category 5 or higher with double shielding (aluminum tape and braiding) for EtherCAT. Use an STP (shielded twisted-pair) cable of category 5 or higher for Ethernet. Products for Ethernet 100BASE-TX described in the table below can be used for both 100BASE-TX and 10BASE-T.

Cable with Connectors

Cables with Connectors (For EtherCAT only)

Item	Appearance	Recommended manufacturer	Cable length (m)	Model
Cable with Connectors on Both Ends (RJ45/RJ45) Standard RJ45 plugs *1 Wire gauge and number of pairs: AWG26, 4-pair cable Cable sheath material: LSZH *2 Cable color: Yellow *3		OMRON	0.3	**XS6W-6LSZH8SS30CM-Y**
			0.5	**XS6W-6LSZH8SS50CM-Y**
			1	**XS6W-6LSZH8SS100CM-Y**
			2	**XS6W-6LSZH8SS200CM-Y**
			3	**XS6W-6LSZH8SS300CM-Y**
			5	**XS6W-6LSZH8SS500CM-Y**
Cable with Connectors on Both Ends (RJ45/RJ45) Rugged RJ45 plugs*1 Wire gauge and number of pairs: AWG22, 2-pair cable Cable color: Light blue		OMRON	0.3	**XS5W-T421-AMD-K**
			0.5	**XS5W-T421-BMD-K**
			1	**XS5W-T421-CMD-K**
			2	**XS5W-T421-DMD-K**
			5	**XS5W-T421-GMD-K**
			10	**XS5W-T421-JMD-K**
Cable with Connectors on Both Ends (M12 Straight/M12 Straight) Shield strengthening connector cable *4 M12/Smartclick connectors Wire gauge and number of pairs: AWG22, 2-pair cable Cable color: Black		OMRON	0.5	**XS5W-T421-BM2-SS**
			1	**XS5W-T421-CM2-SS**
			2	**XS5W-T421-DM2-SS**
			3	**XS5W-T421-EM2-SS**
			5	**XS5W-T421-GM2-SS**
			10	**XS5W-T421-JM2-SS**
Cable with Connectors on Both Ends (M12 Straight/RJ45) Shield strengthening connector cable *4 M12/Smartclick connector and rugged RJ45 plug Wire gauge and number of pairs: AWG22, 2-pair cable Cable color: Black		OMRON	0.5	**XS5W-T421-BMC-SS**
			1	**XS5W-T421-CMC-SS**
			2	**XS5W-T421-DMC-SS**
			3	**XS5W-T421-EMC-SS**
			5	**XS5W-T421-GMC-SS**
			10	**XS5W-T421-JMC-SS**

*1. Cables with standard RJ45 plugs are available in the following lengths: 0.2 m, 0.3 m, 0.5 m, 1 m, 1.5 m, 2 m, 3 m, 5 m, 7.5 m, 10 m, 15 m, 20 m. Cables with rugged RJ45 plugs are available in the following lengths: 0.3 m, 0.5 m, 1 m, 2 m, 3 m, 5 m, 10 m, 15 m. For details, refer to the *Industrial Ethernet Connectors Catalog* (Cat. No. G019).

*2. The lineup features Low Smoke Zero Halogen cables for in-cabinet use and PUR cables for out-of-cabinet use. Although the LSZH cable is single shielded, its communications and noise characteristics meet the standards.

*3. Cables colors are available in yellow, green, and blue.

*4. For details, contact your OMRON representative.

Cables/Connectors

Product name			Recommended manufacturer	Model
Products for EtherCAT or Ethernet (1000BASE-T/100BASE-TX)	Wire gauge and number of pairs: AWG24, 4-pair cable	Cable	Hitachi Cable, Ltd.	**NETSTAR-C5E SAB 0.5 x 4P CP** *1
			Kuramo Electric Co.	**KETH-SB** *1
			SWCC Showa Cable Systems Co.	**FAE-5004** *1
			JMACS Japan Co., Ltd.	**IETP-SB** *1
		RJ45 Connector	Panduit Corporation	**MPS588-C** *1
Products for EtherCAT or Ethernet (100BASE-TX)	Wire gauge and number of pairs: AWG22, 2-pair cable	Cable	Kuramo Electric Co.	**KETH-PSB-OMR** *2
			JMACS Japan Co., Ltd.	**PNET/B** *2
			SWCC Showa Cable Systems Co.	**FAE-5002** *2
		RJ45 Assembly Connector 	OMRON Corporation	**XS6G-T421-1** *2

*1. We recommend you to use the Cable for EtherCAT or Ethernet marked with *1 and the RJ45 Connector marked with *1 together.
*2. We recommend you to use the Cable for EtherCAT or Ethernet marked with *2 and the RJ45 Assembly Connector marked with *2 together.

Note: Connect both ends of cable shielded wires to the connector hoods.

Optional Products/Maintenance Products/DIN Track Accessories

Product name		Model
EtherCAT Junction Slave *1	3 ports. Power supply voltage: 20.4 to 28.8 VDC (24 VDC -15 to +20%). Current consumption: 0.08 A	**GX-JC03**
	6 ports. Power supply voltage: 20.4 to 28.8 VDC (24 VDC -15 to +20%). Current consumption: 0.17 A	**GX-JC06**
USB Flash Drive	OMRON USB Flash Drive (2 GB)	**FZ-MEM2G**
	OMRON USB Flash Drive (8 GB)	**FZ-MEM8G**
End Cover *2 (for CK3M-CPU1□1 CPU Unit)	Must be connected to the right end of the CPU rack and expansion rack. The CPU unit and the expansion slave unit are each provided with one end cover.	**CK3W-TER11**
DIN Track	Length: 0.5 m. Height: 7.3 mm	**PFP-50N**
	Length: 1 m. Height: 7.3 mm	**PFP-100N**
	Length: 1 m. Height: 16 mm	**PFP-100N2**
End Plate	Stopper to prevent units from moving on the DIN track. The minimum order quantity is 10 units.	**PFP-M**

*1. EtherCAT junction slaves cannot be used for EtherNet/IP and Ethernet.
*2. Use the CK3W-TER11 End Cover only for the CK3M-CPU1□1 CPU Unit or CK3W-EXS02 Expansion Slave Unit.

General Specifications

This section describes the Motion Controller specifications.

Item		Specification
Enclosure		Mounted in a panel
Grounding Method		Ground to less than 100 Ω
Operating Environment	Ambient Operating Temperature	0 to 55°C
	Ambient Operating Humidity	10% to 95% (with no condensation or icing)
	Atmosphere	Must be free of corrosive gases.
	Ambient Storage Temperature	-25 to 70°C (with no condensation or icing)
	Vibration Resistance	Conforms to IEC 60068-2-6. 5 to 8.4 Hz with 3.5-mm amplitude, 8.4 to 150 Hz, acceleration of 9.8 m/s^2 100 min each in X, Y, and Z directions (10 sweeps of 10 min each = 100 min total)
	Shock Resistance	Conforms to IEC 60068-2-27. 147 m/s^2, 3 times each in X, Y, and Z directions
Insulation Resistance		20 MΩ min. between isolated circuits (at 100 VDC)
Dielectric Strength		510 VAC between isolated circuits for 1 minute with a leakage current of 5 mA max.
Applicable Standards		cULus, EU: EN 61326, RCM, KC, EAC

Performance Specifications

The performance specifications are shown below.

Item			CK3M-CPU101	CK3M-CPU111	CK3M-CPU121
Memory			Main memory: 1 GB Built-In Flash Memory: 1 GB		
Number of connectable CK3W Units (when using Expansion Rack)			8 Units max. Or 4 CK3W-AX Units max.		
External connection terminals			No EtherCAT	For EtherCAT communications RJ45 × 1 (Shield supported)	
			For Ethernet communications RJ45 × 1 (Shield supported)		
			USB port For external memory connection, USB 2.0 host × 1 Type A		
Motion control	CK3W-AX Unit	Maximum number of controlled axes	16 axes (when using four CK3W-AX Units)		
		Control method	Speed and torque control using analog output Stepper motor control using pulse output Commutation control using DirectPWM output		
	EtherCAT	Maximum number of controlled axes	None	4 axes	8 axes
		Control method		Issuing control commands using EtherCAT	
EtherCAT communications specifications	Communications protocol		None	EtherCAT protocol	
	Baud rate			100 Mbps	
	Physical layer			100BASE-TX (IEEE 802.3)	
	Topology			Line, daisy chain, and branching	
	Transmission media			Twisted-pair cable of category 5 or higher (doubleshielded cable with aluminum tape and braiding)	
	Transmission distance			Distance between nodes: 100 m or less	
	Maximum number of slaves			32	
	Range of node addresses that can be set			1 to 32	
Ethernet communications specifications	Baud rate		100 Mbps		
	Physical layer		100BASE-TX (IEEE 802.3)		
	Frame length		1,514 bytes max.		
	Media access method		CSMA/CD		
	Modulation		Baseband		
	Topology		Star		
	Transmission media		Twisted-pair cable of category 5, 5e, or higher (shielded cable)		
	Maximum transmission distance between Ethernet switch and node		100 m		
	Maximum number of cascade connections		There are no restrictions if an Ethernet switch is used.		
USB port	Physical layer		USB 2.0 compliant, type A connector. Output voltage: 5 V, 0.5 A max.		
	Transmission distance		3 m max.		
Current consumption			CK3M-CPU101: 5 VDC 7.2 W max. CK3M-CPU111/CPU121: 5 VDC 7.8 W max. (including End Cover)		
Dimensions (height × depth × width)			90(H)/80(D)/63.2(W)		
Weight (including End Cover)			220 g max.	230 g max.	

Part Names and Functions

CPU Unit

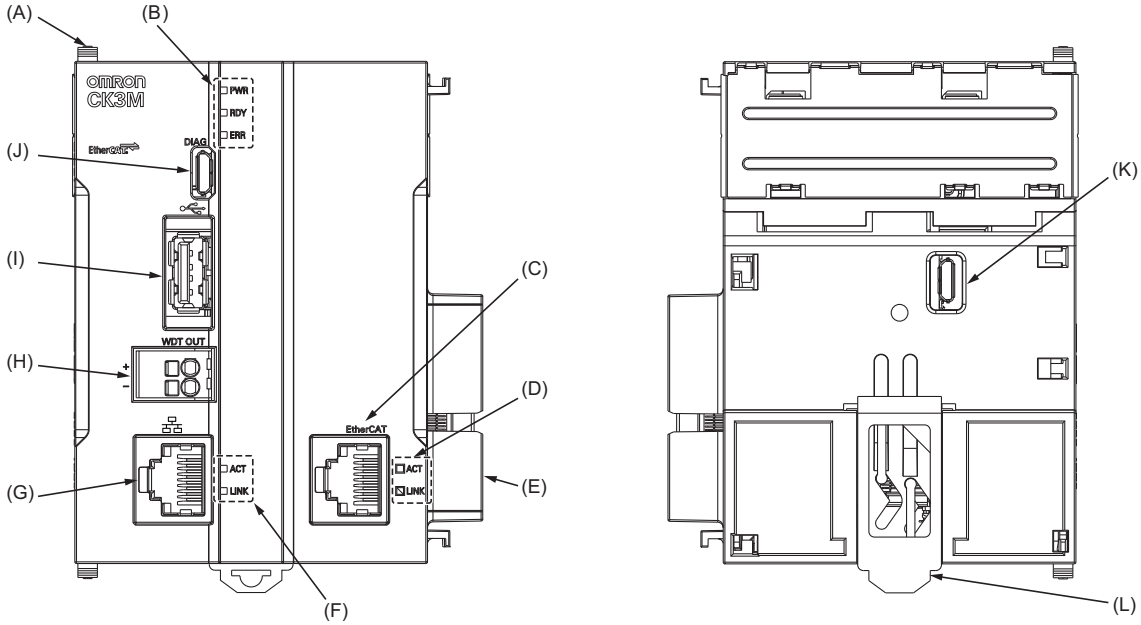

Letter	Name	Function
A	Slider	Holds the Units together.
B	CPU Unit operation indicators	Shows the operation status of the CPU Unit using multiple indicators.
C	EtherCAT communications connector	Connects to an EtherCAT network communications cable.
D	EtherCAT communications port operation indicators	Shows the operation status of EtherCAT.
E	Unit connector	Connector that connects to the Unit.
F	Ethernet communications port operation indicators	Shows the operation status of Ethernet.
G	Ethernet communications connector	Connects to an Ethernet network communications cable.
H	Watchdog output terminal block	Normally in ON state, and switches to OFF when watchdog is activated.
I	USB 2.0 connector	USB 2.0 interface connector. Connects the USB memory.
J	USB connector for maintenance	Do not use.
K	USB connector for maintenance	Do not use.
L	DIN Track mounting hook	Used to mount the Unit to a DIN Track.

Version Information

CK3W Units and Supported Versions of CPU Units and Power PMAC IDE

This section provides version information that you need to know when connecting a CK3W Unit to a CPU Unit and PowerPMAC IDE.
The table below specifies the correspondence between each CK3W Unit and the versions of CPU Unit and Power PMAC IDE.

Be sure to use the version combinations listed in the table below.

CK3W Unit	Supported version	
	CPU Unit's PMAC firmware revision	Power PMAC IDE version
CK3W-AX1414□/-AX1515□	All versions supported	Ver. 4.2 or later
CK3W-AX1313□/-AX2323□	Ver. 2.5.2 or later	Ver. 4.3 or later
CK3W-MD7110/-MD7120	Ver. 2.5.2 or later	Ver. 4.3 or later
CK3W-AD2100/-AD3100	Ver. 2.5.2 or later	Ver. 4.3 or later
CK3W-EXM01/-EXS02	Ver. 2.5.2 or later	Ver. 4.3 or later

Restrictions on Using the NX-series EtherCAT Coupler Unit

When OMRON NX-series EtherCAT Coupler Units are used as slaves with the CPU Unit as the EtherCAT master, the following models and unit versions of EtherCAT Coupler Units can be connected.

Model	Unit version	Connectable/Unconnectable
NX-ECC203	Ver.1.4 or later	Connectable
	Ver.1.3 or earlier	Unconnectable
NX-ECC202	All versions	
NX-ECC201	All versions	

Dimensions

(Unit: mm)

CPU Unit

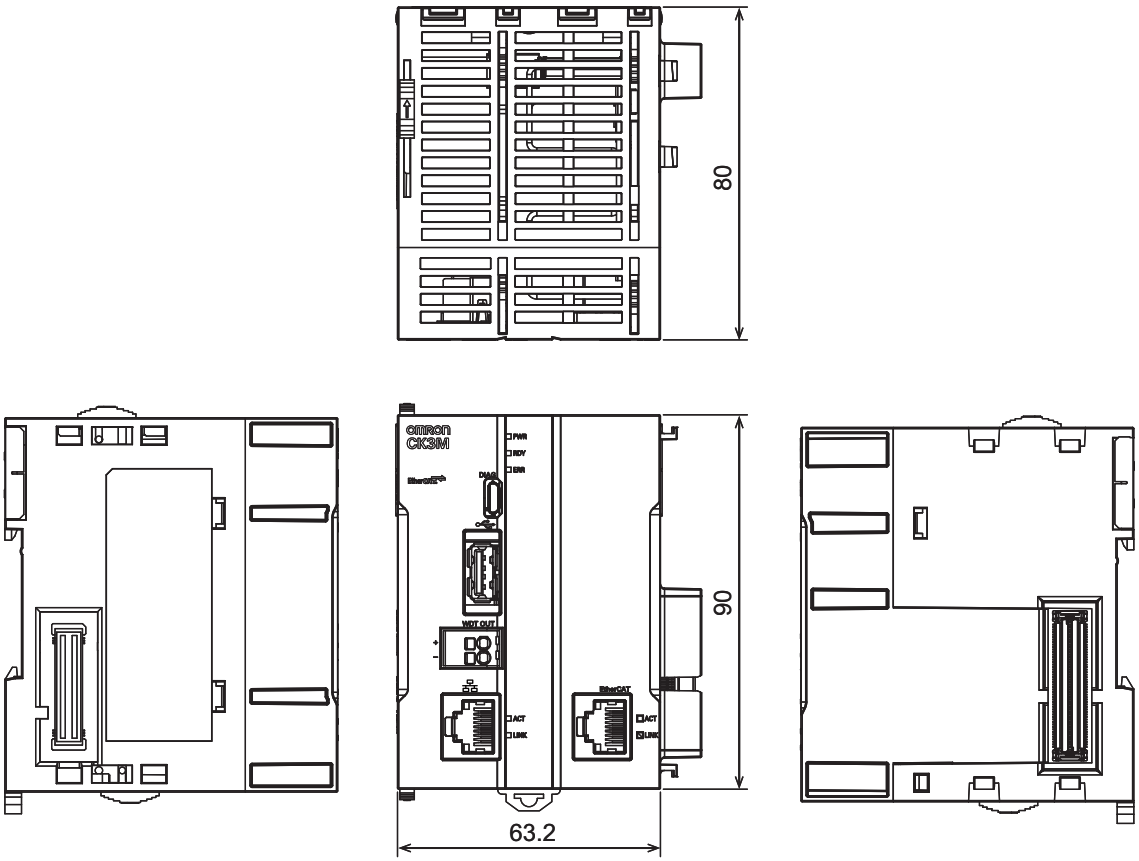

End Cover

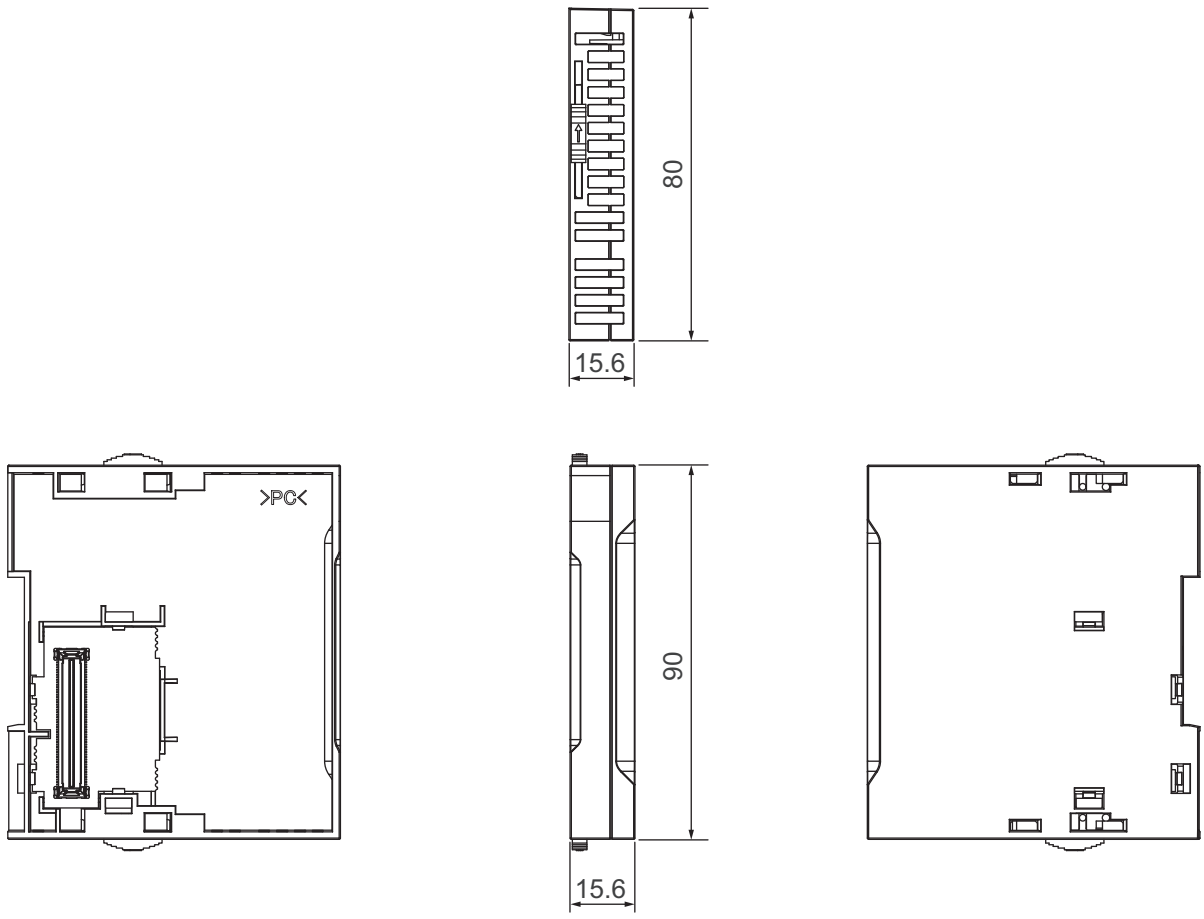

Power Supply Unit

Model	Unit width (mm)
CK3W-PD048	45

CPU Unit

Model	Unit width (mm)
CK3M-CPU101	63.2
CK3M-CPU111	
CK3M-CPU121	

End Cover

Model	Unit width (mm)
CK3W-TER11	15.6

Axis Interface Unit

Model	Unit width (mm)
CK3W-AX1313N	130
CK3W-AX1414N	
CK3W-AX1515N	
CK3W-AX2323N	
CK3W-AX1313P	
CK3W-AX1414P	
CK3W-AX1515P	
CK3W-AX2323P	

Digital I/O Unit, Analog Input Unit, Expansion Master Unit, and Expansion Slave Unit

Model	Unit width (mm)
CK3W-MD7110	31.6
CK3W-MD7120	
CK3W-AD2100	
CK3W-AD3100	
CK3W-EXM01	
CK3W-EXS02	

Design Example for Width W

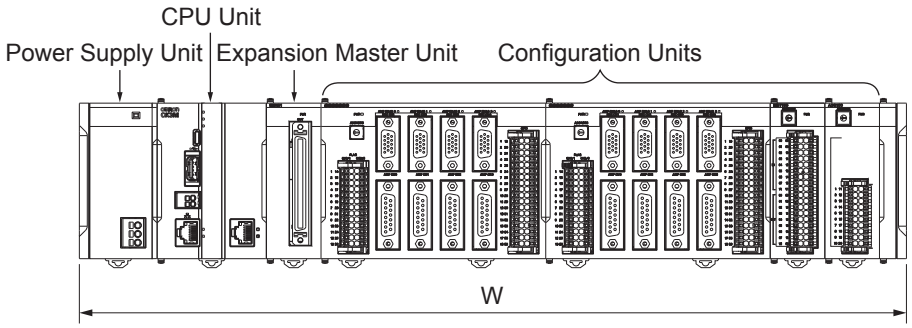

Name	Model	Unit width (mm)	Qty	Subtotal unit width (mm)
Power Supply Unit	CK3W-PD048	45	1	45
CPU Unit	CK3M-CPU101	63.2	1	63.2
Expansion Master Unit	CK3W-EXM01	31.6	1	31.6
Axis Interface Unit	CK3W-AX1414N	130	2	260
Digital I/O Unit	CK3W-MD7110	31.6	1	31.6
Analog Input Unit	CK3W-AD2100	31.6	1	31.6
End Cover	CK3W-TER11	15.6	1	15.6
Total W = 45 + 63.2 + 31.6 + 130 × 2 + 31.6 + 31.6 + 15.6				478.6

Installation Dimensions

Installation Dimensions

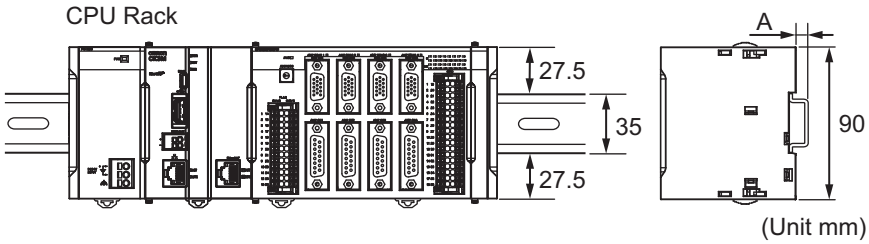

DIN Track	A (mm)
PFP-100N2	16
PFP-100N	7.3
PFP-50N	7.3

Installation Height

For CK3M-series CPU Unit

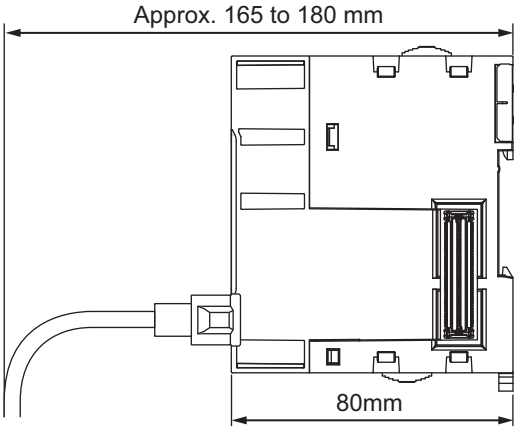

For CK3W-AX Unit

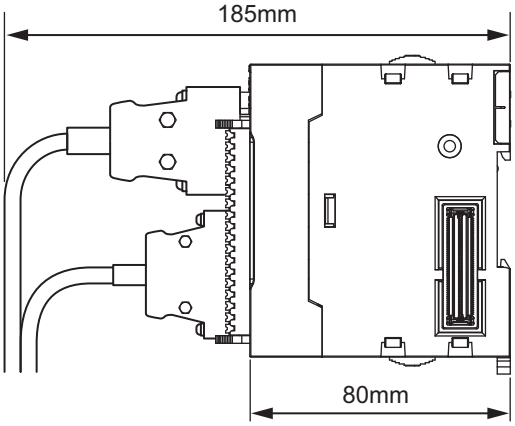

For CK3W-MD Unit

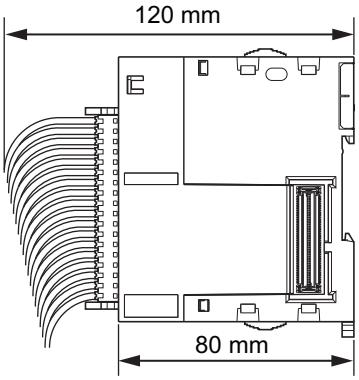

For CK3W-AD Unit

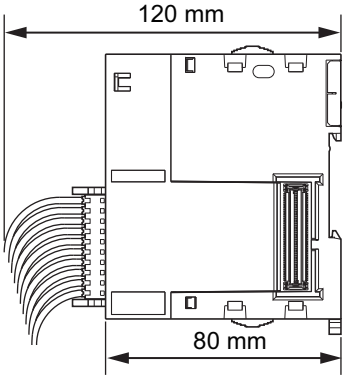

For CK3W-EXM01 and CK3W-EXS02

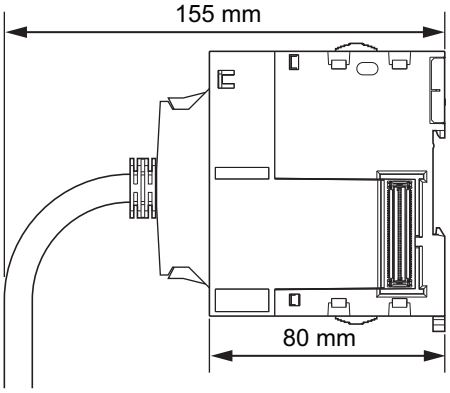

Related Manuals

The following manuals are related. Use these manuals for reference. Contact your OMRON representative for information on how to procure these manuals.

Manual name	Cat. No.	Application	Description
CK3M-series Programmable Multi-Axis Controller Hardware User's Manual	O036	Learning the basic specifications of the CK3M-series Programmable Multi-Axis Controller, including introductory information, design, installation, and maintenance. Mainly hardware information is provided.	An introduction to the entire CK3M-series system is provided along with the following information. • Features and system configuration • Introduction • Part names and functions • General specifications • Installation and wiring • Maintenance and inspection
Power PMAC User's Manual	O014	Learning the features and usage examples of the CK3M-series Programmable Multi-Axis Controller.	The following information is provided on the CK3M-series Programmable Multi-Axis Controller. • Basic functions • Setup examples • Programming examples

Manual name	Cat. No.	Application	Description
Power PMAC Software Reference Manual	O015	Learning how to program a CK3M-series Programmable Multi-Axis Controller.	The following information is provided on the CK3M-series Programmable Multi-Axis Controller. • Details of commands • Details of data structure
Power PMAC IDE User Manual	O016	Learning how to operate Power PMAC IDE, the integrated development environment of the Controller.	Describes the operating procedures of Power PMAC IDE, and examples of how to start the system.
Power PMAC-NC-16 Quick Start Manual	O017	Briefly understanding the basic usage of Power PMAC-NC16.	Describes the Quick setup procedure to run Power PMAC-NC16 on a desktop PC by showing some examples.
Power PMAC-NC16 .ini Configuration Manual	O018	Configuring an application for CNC devices by using Power PMAC-NC16.	Describes how to set up *PowerPmacNC.ini*, the setup data file to be loaded when Power PMAC-NC16 starts.
Power PMAC-NC16 Software User Manual	O019	Learning about usage and features of Power PMAC-NC16, Support Software required to use the Controller for CNC devices.	The following information is provided on Power PMAC-NC16. • How to use the software • Features included in the software • Features that can be customized
Power PMAC-NC16 Mill G-Code Manual	O020	Creating programs for CNC devices by using Power PMAC-NC16.	Describes the basic G-code set that can be used for Power PMAC-NC16, and relevant instructions.

OMRON AUTOMATION AMERICAS HEADQUARTERS • Chicago, IL USA • 847.843.7900 • 800.556.6766 • automation.omron.com

OMRON CANADA, INC. • HEAD OFFICE
Toronto, ON, Canada • 416.286.6465 • 866.986.6766 • automation.omron.com

OMRON ELECTRONICS DE MEXICO • HEAD OFFICE
Ciudad de México • 52.55.5901.4300 • 01.800.386.6766 • mela@omron.com

OMRON ELECTRONICS DE MEXICO • SALES OFFICE
San Pedro Garza García, N.L. • 81.12.53.7392 • 01.800.386.6766 • mela@omron.com

OMRON ELECTRONICS DE MEXICO • SALES OFFICE
Eugenio Garza Sada,León, Gto • 01.800.386.6766 • mela@omron.com

OMRON ELETRÔNICA DO BRASIL LTDA • HEAD OFFICE
São Paulo, SP, Brasil • 55.11.2101.6300 • www.omron.com.br

OMRON ARGENTINA • SALES OFFICE
Buenos Aires, Argentina • +54.11.4521.8630 • +54.11.4523.8483
mela@omron.com

OTHER OMRON LATIN AMERICA SALES
+54.11.4521.8630 • +54.11.4523.8483 • mela@omron.com

Authorized Distributor:

Controllers & I/O
• Machine Automation Controllers (MAC) • Motion Controllers
• Programmable Logic Controllers (PLC) • Temperature Controllers • Remote I/O

Robotics
• Industrial Robots • Mobile Robots

Operator Interfaces
• Human Machine Interface (HMI)

Motion & Drives
• Machine Automation Controllers (MAC) • Motion Controllers • Servo Systems
• Frequency Inverters

Vision, Measurement & Identification
• Vision Sensors & Systems • Measurement Sensors • Auto Identification Systems

Sensing
• Photoelectric Sensors • Fiber-Optic Sensors • Proximity Sensors
• Rotary Encoders • Ultrasonic Sensors

Safety
• Safety Light Curtains • Safety Laser Scanners • Programmable Safety Systems
• Safety Mats and Edges • Safety Door Switches • Emergency Stop Devices
• Safety Switches & Operator Controls • Safety Monitoring/Force-guided Relays

Control Components
• Power Supplies • Timers • Counters • Programmable Relays
• Digital Panel Meters • Monitoring Products

Switches & Relays
• Limit Switches • Pushbutton Switches • Electromechanical Relays
• Solid State Relays

Software
• Programming & Configuration • Runtime

I57I-E3-01 Note: Specifications are subject to change. © 2019 Omron. All Rights Reserved. Printed in U.S.A.

Printed on recycled paper.