Programmable Multi Axis Controller CK3M-series CPU Unit

CK3M-CPU□□□

Controls multiple analog servo drives at the fastest speeds of 50 µs/5 axes, enabling high-precision processing



CK3M-CPU□□□

Features

- Controls up to eight analog servo drives via two CK3W-AX□□□□□ Axial Interface Units
- The CK3M-CPU120 controls up to eight EtherCAT servo drives
- G-Code/ANSI C/original programming language
- EtherCAT slaves including vision and I/O can be connected
- Compact design (1/3 the size of conventional models)
- The EtherCAT network reduces wiring and machine size

EtherCAT® is a registered trademark and patented technology, licensed by Beckhoff Automation GmbH, Germany.
Other company names and product names in this document are the trademarks or registered trademarks of their respective companies.
The product photographs and figures that are used in this catalog may vary somewhat from the actual products.
PMAC is an abbreviation for Programmable Multi Axis Controller.

System Configurations

Basic System Configuration

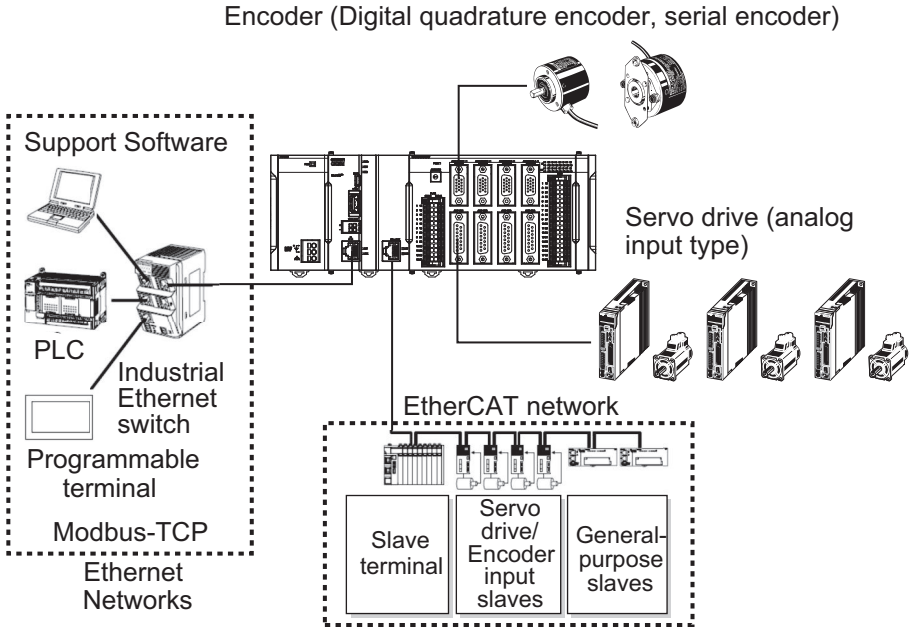

Network Configuration

Connecting to the Power PMAC IDE

Connect the CK3M CPU Unit and the Power PMAC IDE through Ethernet.

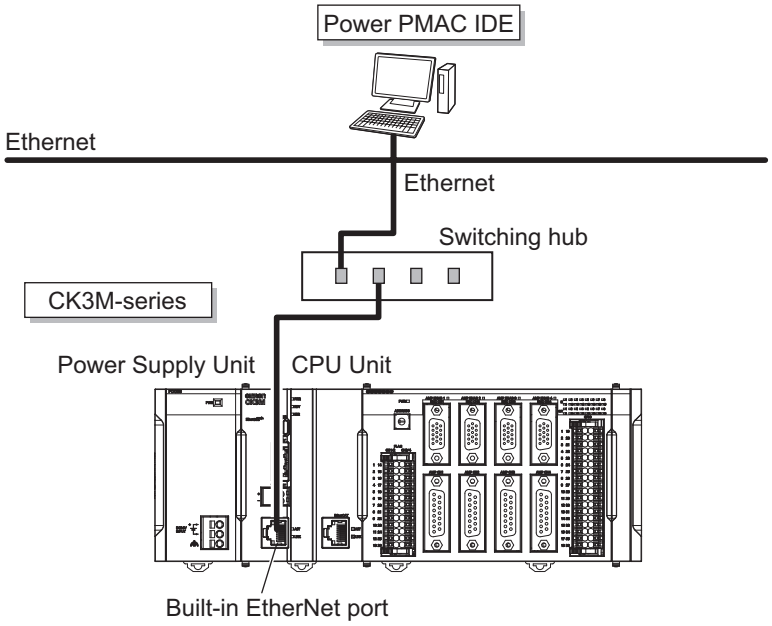

Ethernet Network Configuration

The Ethernet communications port on the CPU Unit supports the Modbus-TCP protocol.
It can be connected to devices such as PLCs and programmable terminals that support the Modbus-TCP protocol.

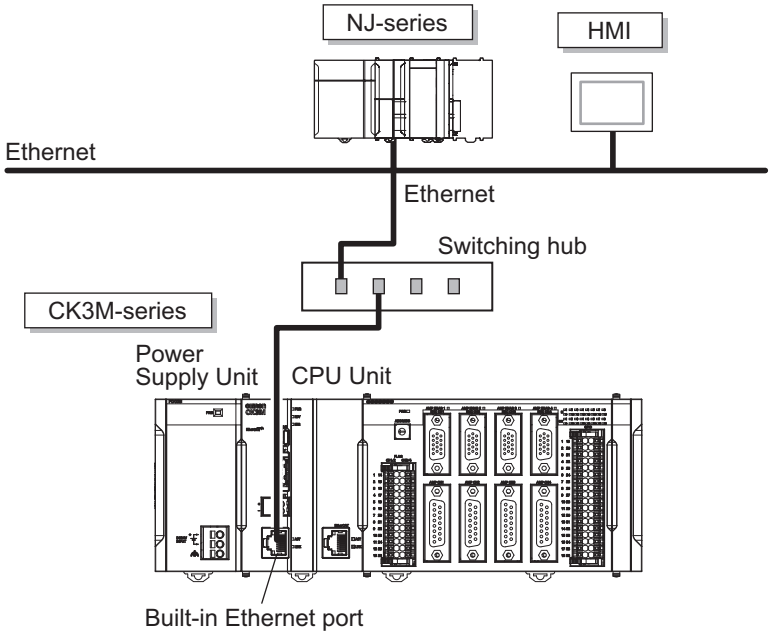

Ordering Information

International Standards

The standards are abbreviated as follows: U: UL, U1: UL (Class I Division 2 Products for Hazardous Locations), C: CSA, UC: cULus, UC1: cULus (Class I Division 2 Products for Hazardous Locations), CU: cUL, N: NK, L: Lloyd, CE: EU Directives, RCM: Regulatory Compliance Mark and KC: KC Registration. Contact your OMRON representative for further details and applicable conditions for these standards.

CK3M CPU Units

The models and outline of specifications are given below.

Product name	Memory capacity	EtherCAT port	Maximum number of controlled axes via EtherCAT port	Model	Standards
CPU Unit *1	RAM: 1 GB Built-In flash memory: 1 GB	None	-	CK3M-CPU100	CE, RCM, KC
		EtherCAT: 1 port (DC sync)	4	CK3M-CPU110	
		EtherCAT: 1 port (DC sync)	8	CK3M-CPU120	

*1. One CK3W-TER01 End Cover is provided with the CK3M-CPU1□0 CPU Unit.

Support Software

The following table shows the Support Software used to configure, monitor, program, and debug the Motion Controller.

Configuration software	Application	How to Procure
Power PMAC IDE *1	This computer software is used to configure the Motion Controller, create user programs, and debug the programs.	This is free software. *2

*1. Use Power PMAC IDE Ver.4.0 or a later version.
*2. Contact your OMRON representative for information on how to procure.

EtherCAT Coupler Units

You can use NX-series Units via the EtherCAT Coupler Unit that is connected to the built-in EtherCAT port on the CPU Unit.

Product name	Communications cycle in DC Mode	Current consumption	Maximum I/O power supply current	Model	Standards
EtherCAT Coupler Unit *1 	125 to 10,000 μs *2	1.25 W or lower	10 A	NX-ECC203	UC1, N, CE, KC

*1. One NX-END01 End Cover is provided with the EtherCAT Coupler Unit.
*2. This depends on the specifications of the EtherCAT master.

Industrial Switching Hubs

Product name	Specifications	Recommended manufacturer	Model	Standards
Industrial Switching Hub	3 ports. Current consumption: 0.22 A Power supply connector included	OMRON Corporation	W4S1-03B	UC, CE
	5 ports. Current consumption: 0.22 A Power supply connector included		W4S1-05B	
	5 ports. Current consumption: 0.22 A Failure detection Power supply connector and connector for informing error included		W4S1-05C	CE
	Ask the manufacturer for details.	Cisco Systems	-	-
	Ask the manufacturer for details.	CONTEC	-	-
	Ask the manufacturer for details.	PHOENIX CONTACT	-	-

Recommended EtherCAT and Ethernet Communications Cables

Use a straight STP (shielded twisted-pair) cable of category 5 or higher with double shielding (aluminum tape and braiding) for EtherCAT. Use a straight STP (shielded twisted-pair) cable of category 5 or higher for Ethernet. Products for Ethernet 100BASE-TX described in the table below can be used for both 100BASE-TX and 10BASE-T.

Cable with Connectors

Cables with Connectors (For EtherCAT only)

Item	Appearance	Recommended manufacturer	Cable length (m)	Model
Cable with Connectors on Both Ends (RJ45/RJ45) Standard RJ45 plugs*1 Wire gauge and number of pairs: AWG26, 4-pair cable Cable sheath material: LSZH*2 Cable color: Yellow*3		OMRON	0.3	XS6W-6LSZH8SS30CM-Y
			0.5	XS6W-6LSZH8SS50CM-Y
			1	XS6W-6LSZH8SS100CM-Y
			2	XS6W-6LSZH8SS200CM-Y
			3	XS6W-6LSZH8SS300CM-Y
			5	XS6W-6LSZH8SS500CM-Y
Cable with Connectors on Both Ends (RJ45/RJ45) Rugged RJ45 plugs*1 Wire gauge and number of pairs: AWG22, 2-pair cable Cable color: Light blue		OMRON	0.3	XS5W-T421-AMD-K
			0.5	XS5W-T421-BMD-K
			1	XS5W-T421-CMD-K
			2	XS5W-T421-DMD-K
			5	XS5W-T421-GMD-K
			10	XS5W-T421-JMD-K
Cable with Connectors on Both Ends (M12 Straight/M12 Straight) Shield strengthening connector cable*4 M12/Smartclick connectors Wire gauge and number of pairs: AWG22, 2-pair cable Cable color: Black		OMRON	0.5	XS5W-T421-BM2-SS
			1	XS5W-T421-CM2-SS
			2	XS5W-T421-DM2-SS
			3	XS5W-T421-EM2-SS
			5	XS5W-T421-GM2-SS
			10	XS5W-T421-JM2-SS
Cable with Connectors on Both Ends (M12 Straight/RJ45) Shield strengthening connector cable*4 M12/Smartclick connector and rugged RJ45 plug Wire gauge and number of pairs: AWG22, 2-pair cable Cable color: Black		OMRON	0.5	XS5W-T421-BMC-SS
			1	XS5W-T421-CMC-SS
			2	XS5W-T421-DMC-SS
			3	XS5W-T421-EMC-SS
			5	XS5W-T421-GMC-SS
			10	XS5W-T421-JMC-SS
Cable with Connectors on Both Ends (RJ45/RJ45) Rugged standard RJ45 plugs *5 Wire gauge and number of pairs: AWG22, 2-pair cable Cable color: Yellow		3M Japan Limited	0.25	3RHS4-1100-0.25M
			0.5	3RHS4-1100-0.5M
			1	3RHS4-1100-1M
			2	3RHS4-1100-2M
			5	3RHS4-1100-5M
			10	3RHS4-1100-10M

*1. Cables with standard RJ45 plugs are available in the following lengths: 0.2 m, 0.3 m, 0.5 m, 1 m, 1.5 m, 2 m, 3 m, 5 m, 7.5 m, 10 m, 15 m, 20 m. Cables with rugged RJ45 plugs are available in the following lengths: 0.3 m, 0.5 m, 1 m, 2 m, 3 m, 5 m, 10 m, 15 m. For details, refer to the *Industrial Ethernet Connectors Catalog* (Cat. No. G019).

*2. The lineup features Low Smoke Zero Halogen cables for in-cabinet use and PUR cables for out-of-cabinet use. Although the LSZH cable is single shielded, its communications and noise characteristics meet the standards.

*3. Cables colors are available in yellow, green, and blue.

*4. For details, contact your OMRON representative.

*5. Cables are available from 0.25 m to 100 m. Ask the manufacturer for details.

Cables/Connectors

Product name			Recommended manufacturer	Model
Products for EtherCAT or Ethernet (1000BASE-T/100BASE-TX)	Wire gauge and number of pairs: AWG24, 4-pair cable	Cable	Hitachi Cable, Ltd.	NETSTAR-C5E SAB 0.5 x 4P *1
			Kuramo Electric Co.	KETH-SB *1
			SWCC Showa Cable Systems Co.	FAE-5004 *1
			JMACS Japan Co., Ltd.	IETP-SB *1
		RJ45 Connector	Panduit Corporation	MPS588-C *1
Products for EtherCAT or Ethernet (100BASE-TX)	Wire gauge and number of pairs: AWG22, 2-pair cable	Cable	Kuramo Electric Co.	KETH-PSB-OMR *2
			JMACS Japan Co., Ltd.	PNET/B *2
			SWCC Showa Cable Systems Co.	FAE-5002 *2
		RJ45 Assembly Connector 	OMRON Corporation	XS6G-T421-1 *2
Products for EtherCAT (100BASE-TX)	Wire gauge and number of pairs: AWG22, 2-pair cable	Cable	3M Japan Limited	79100-IE4P-F1-YE *3
		RJ45 Assembly Connector		3R104-1110-000AM *3

*1. We recommend you to use the above Cable for EtherCAT or Ethernet and the above RJ45 Connector together.
*2. We recommend you to use the above Cable for EtherCAT or Ethernet and the above RJ45 Assembly Connector together.
*3. We recommend you to use the above Cable for EtherCAT and the above RJ45 Assembly Connector together.

Note Connect both ends of cable shielded wires to the connector hoods.

Optional Products/Spare Parts/DIN Track Mounting Brackets

Product name	Specifications	Model	Standards
EtherCAT Junction Slave *1	3 ports. Power supply voltage: 20.4 to 28.8 VDC (24 VDC -15 to +20%). Current consumption: 0.08 A	GX-JC03	CE, UC1
	6 ports. Power supply voltage: 20.4 to 28.8 VDC (24 VDC -15 to +20%). Current consumption: 0.17 A	GX-JC06	
USB Flash Drive	OMRON's USB Flash Drive (2 GB)	FZ-MEM2G	-
	OMRON's USB Flash Drive (8 GB)	FZ-MEM8G	
End Cover *2 (for CK3M-CPU1□0 CPU Unit)	Must be connected to the right end of the CPU rack. One End Cover is provided with the CPU Unit.	CK3W-TER01	CE
DIN Track	Length: 0.5 m, Height: 7.3 mm	PFP-50N	-
	Length: 1 m, Height: 7.3 mm	PFP-100N	
	Length: 1 m, Height: 16 mm	PFP-100N2	
End Plate	Stopper to prevent units from moving on the DIN track. The minimum order quantity is 10 units.	PFP-M	-

*1. EtherCAT junction slaves cannot be used for EtherNet/IP and Ethernet.
*2. Use the end cover with the same model number as one provided with the CPU unit.

General Specifications

This section describes the Motion Controller specifications.

Item		Specification
Enclosure		Mounted in a panel
Grounding Method		Ground to less than 100 Ω.
Operating Environment	**Ambient Operating Temperature**	0 to 55°C
	Ambient Operating Humidity	10% to 95% (with no condensation or icing)
	Atmosphere	Must be free of corrosive gases.
	Ambient Storage Temperature	-25 to 70°C (with no condensation or icing)
	Vibration Resistance	Conforms to IEC 60068-2-6. 5 to 8.4 Hz with 3.5-mm amplitude, 8.4 to 150 Hz, acceleration of 9.8 m/s^2 100 min each in X, Y, and Z directions (10 sweeps of 10 min each = 100 min total)
	Shock Resistance	Conforms to IEC 60068-2-27. 147 m/s^2, 3 times each in X, Y, and Z directions
Insulation Resistance		20 MΩ min. between isolated circuits (at 100 VDC)
Dielectric Strength		510 VAC between isolated circuits for 1 minute with a leakage current of 5 mA max.
Applicable Standards		EU: EN 61326, RCM, KC

Performance Specifications

The performance specifications are shown below.

Item			CK3M-CPU100	CK3M-CPU110	CK3M-CPU120
Memory			Main memory: 1 GB Built-In Flash Memory: 1 GB		
Number of connectable CK3W-AX Unit Units			2 Units max.		
External connection terminals			No EtherCAT	For EtherCAT communications RJ45 × 1 (Shield supported)	
			For Ethernet communications RJ45 × 1 (Shield supported)		
			USB port For external memory connection, USB 2.0 host × 1 Type A		
Motion control	**CK3W-AX Unit**	**Maximum number of controlled axes**	8 axes (when using two CK3W-AX Units)		
		Control method	Speed and torque control using analog output		
	EtherCAT	**Maximum number of controlled axes**	None	4 axes	8 axes
		Control method		Issuing control commands using EtherCAT	
EtherCAT communications specifications	**Communications protocol**		None	EtherCAT protocol	
	Baud rate			100 Mbps	
	Physical layer			100BASE-TX (IEEE 802.3)	
	Topology			Line, daisy chain, and branching	
	Transmission media			Twisted-pair cable of category 5 or higher (double-shielded cable with aluminum tape and braiding)	
	Transmission distance			Distance between nodes: 100 m or less	
	Maximum number of slaves			32	
	Range of node addresses that can be set			1 to 32	
Ethernet communications specifications	**Baud rate**		100 Mbps		
	Physical layer		100BASE-TX (IEEE 802.3)		
	Frame length		1,514 bytes max.		
	Media access method		CSMA/CD		
	Modulation		Baseband		
	Topology		Star		
	Transmission media		Twisted-pair cable of category 5, 5e, or higher (shielded cable)		
	Maximum transmission distance between Ethernet switch and node		100 m		
	Maximum number of cascade connections		There are no restrictions if an Ethernet switch is used.		
USB port	**Physical layer**		USB 2.0 compliant, type A connector. Output voltage: 5 V, 0.5 A max.		
	Transmission distance		3 m max.		
Current consumption			CK3M-CPU100: 5 VDC 1320 mA or less CK3M-CPU110/CPU120: 5 VDC 1380 mA or less (including End Cover)		
Dimensions (height × depth × width)			90 (H)/80 (D)/63.2 (W)		
Weight			220 g or less (including End Cover)		

Part Names and Functions

CPU Unit

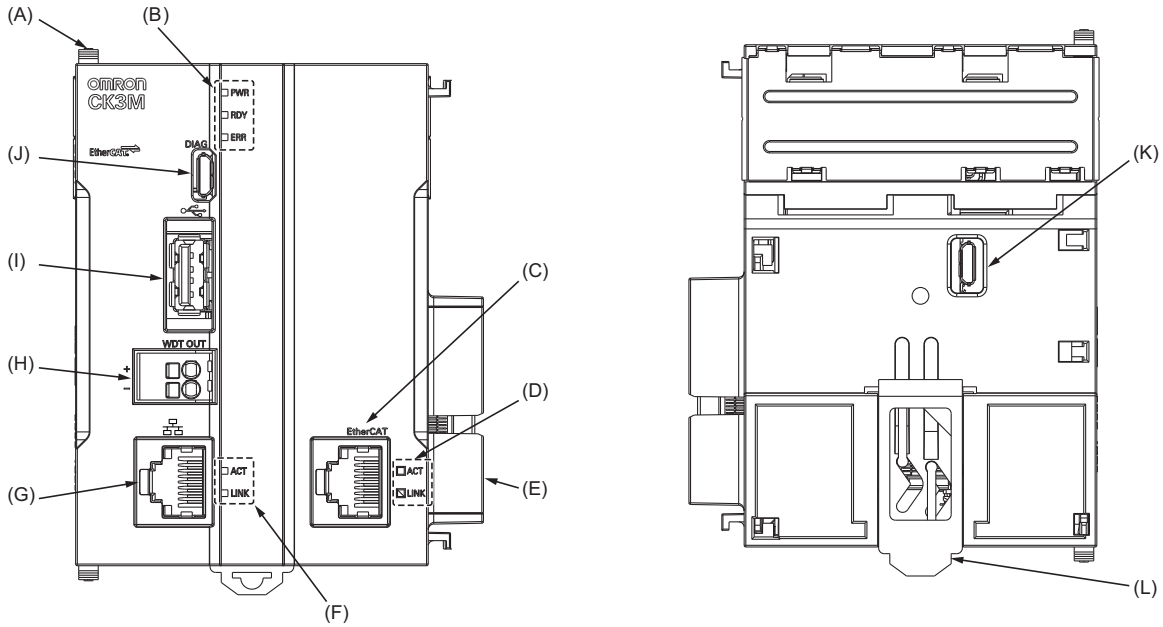

Letter	Name	Function
A	Slider	Holds the Units together.
B	CPU Unit operation indicators	Shows the operation status of the CPU Unit using multiple indicators.
C	EtherCAT communications connector	Connects to an EtherCAT network communications cable.
D	EtherCAT communications port operation indicators	Shows the operation status of EtherCAT.
E	Unit connector	Connector that connects to the Unit.
F	Ethernet communications port operation indicators	Shows the operation status of Ethernet.
G	Ethernet communications connector	Connects to an Ethernet network communications cable.
H	Watchdog output terminal block	Normally in ON state, and switches to OFF when watchdog is activated.
I	USB 2.0 connector	USB 2.0 interface connector. Connects the USB memory.
J	USB connector for maintenance	Do not use.
K	USB connector for maintenance	Do not use.
L	DIN Track mounting hook	Used to mount the Unit to a DIN Track.

Version Information

Restrictions on Using the NX-series EtherCAT Coupler Unit

When OMRON NX-series EtherCAT Coupler Units are used as slaves with the CPU Unit as the EtherCAT master, the following models and unit versions of EtherCAT Coupler Units can be connected.

Model	Unit version	Connectable/Unconnectable
NX-ECC203	Ver.1.4 or later	Connectable
	Ver.1.3 or earlier	Unconnectable
NX-ECC202	All versions	
NX-ECC201	All versions	

Dimensions

(Unit: mm)

CPU Unit

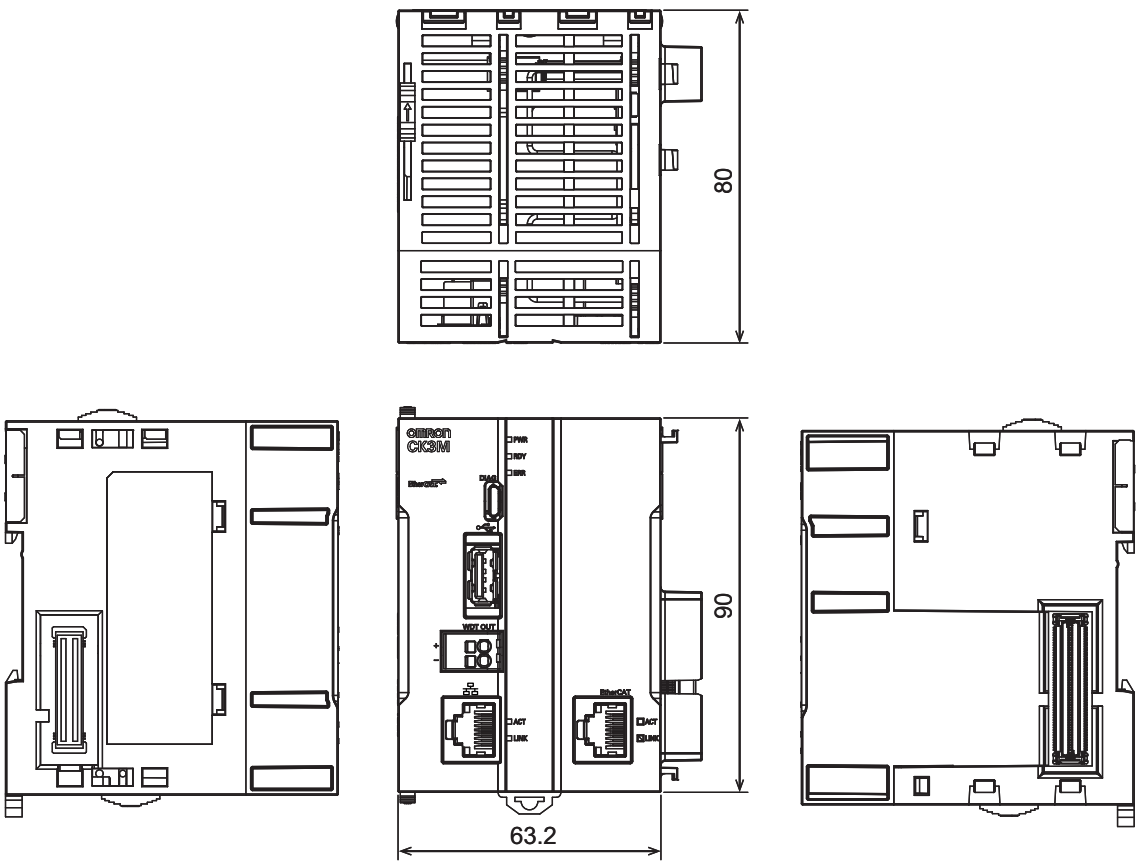

CPU Unit

Model	Unit width (mm)
CK3M-CPU100	63.2
CK3M-CPU110	
CK3M-CPU120	

End Cover

Model	Unit width (mm)
CK3W-TER01	15.6

Design Example for Width W

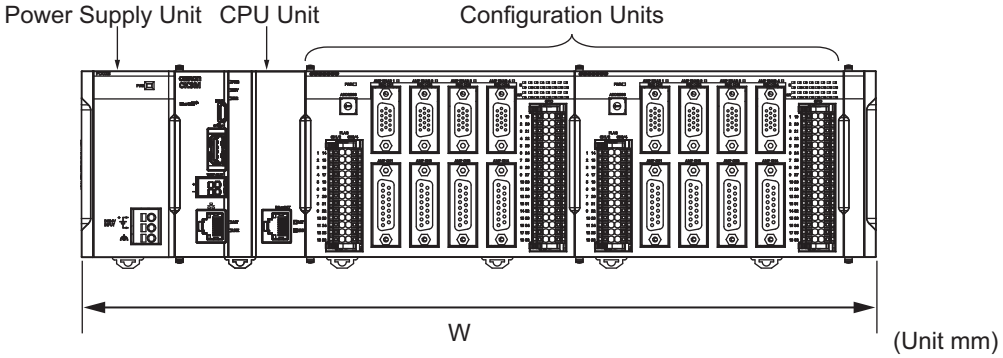

(Unit mm)

Name	Model	Unit width (mm)	Qty	Subtotal unit width (mm)
Power Supply Unit	CK3W-PD028	45	1	45
CPU Unit	CK3M-CPU100	63.2	1	63.2
Axis Interface Unit	CK3W-AX1111N	130	2	260
End Cover	CK3W-TER01	15.6	1	15.6
Total W=45+63.2+130×2+15.6				383.8

Installation Dimensions

Installation Dimensions

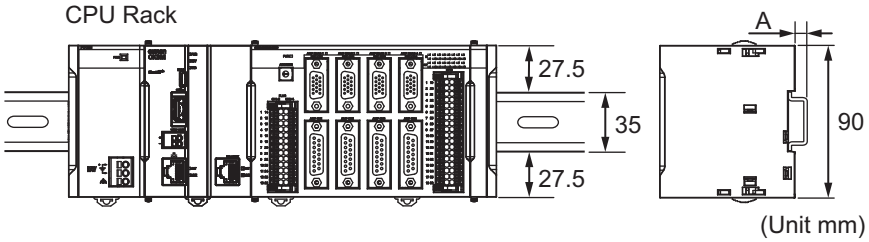

DIN Track	A (mm)
PFP-100N2	16
PFP-100N	7.3
PFP-50N	7.3

Installation Height

For CK3M CPU Unit

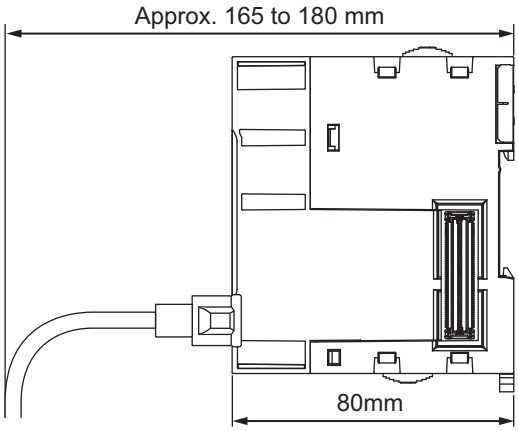

Related Manuals

The following manuals are related. Use these manuals for reference. Contact your OMRON representative for information on how to procure these manuals.

Manual name	Cat. No.	Application	Description
CK3M-series Programmable Multi-Axis Controller Hardware User's Manual	O034	Learning the basic specifications of the CK3M-series Programmable Multi-Axis Controller, including introductory information, design, installation, and maintenance. Mainly hardware information is provided.	An introduction to the entire CK3M-series system is provided along with the following information. • Features and system configuration • Introduction • Part names and functions • General specifications • Installation and wiring • Maintenance and inspection
Power PMAC User's Manual	O014	Learning the features and usage examples of the CK3M-series Programmable Multi-Axis Controller.	The following information is provided on the CK3M-series Programmable Multi-Axis Controller. • Basic functions • Setup examples • Programming examples
Power PMAC Software Reference Manual	O015	Learning how to program a CK3M-series Programmable Multi-Axis Controller.	The following information is provided on the CK3M-series Programmable Multi-Axis Controller. • Details of commands • Details of data structure
Power PMAC IDE User Manual	O016	Learning how to operate Power PMAC IDE, the integrated development environment of the Controller.	Describes the operating procedures of Power PMAC IDE, and examples of how to start the system.

Terms and Conditions Agreement

Read and understand this catalog.
Please read and understand this catalog before purchasing the products. Please consult your OMRON representative if you have any questions or comments.

Warranties.
(a) Exclusive Warranty. Omron's exclusive warranty is that the Products will be free from defects in materials and workmanship for a period of twelve months from the date of sale by Omron (or such other period expressed in writing by Omron). Omron disclaims all other warranties, express or implied.
(b) Limitations. OMRON MAKES NO WARRANTY OR REPRESENTATION, EXPRESS OR IMPLIED, ABOUT NON-INFRINGEMENT, MERCHANTABILITY OR FITNESS FOR A PARTICULAR PURPOSE OF THE PRODUCTS. BUYER ACKNOWLEDGES THAT IT ALONE HAS DETERMINED THAT THE
PRODUCTS WILL SUITABLY MEET THE REQUIREMENTS OF THEIR INTENDED USE.
Omron further disclaims all warranties and responsibility of any type for claims or expenses based on infringement by the Products or otherwise of any intellectual property right. (c) Buyer Remedy. Omron's sole obligation hereunder shall be, at Omron's election, to (i) replace (in the form originally shipped with Buyer responsible for labor charges for removal or replacement thereof) the non-complying Product, (ii) repair the non-complying Product, or (iii) repay or credit Buyer an amount equal to the purchase price of the non-complying Product; provided that in no event shall Omron be responsible for warranty, repair, indemnity or any other claims or expenses regarding the Products unless Omron's analysis confirms that the Products were properly handled, stored, installed and maintained and not subject to contamination, abuse, misuse or inappropriate modification. Return of any Products by Buyer must be approved in writing by Omron before shipment. Omron Companies shall not be liable for the suitability or unsuitability or the results from the use of Products in combination with any electrical or electronic components, circuits, system assemblies or any other materials or substances or environments. Any advice, recommendations or information given orally or in writing, are not to be construed as an amendment or addition to the above warranty.
See http://www.omron.com/global/ or contact your Omron representative for published information.

Limitation on Liability; Etc.
OMRON COMPANIES SHALL NOT BE LIABLE FOR SPECIAL, INDIRECT, INCIDENTAL, OR CONSEQUENTIAL DAMAGES, LOSS OF PROFITS OR PRODUCTION OR COMMERCIAL LOSS IN ANY WAY CONNECTED WITH THE PRODUCTS, WHETHER SUCH CLAIM IS BASED IN CONTRACT, WARRANTY, NEGLIGENCE OR STRICT LIABILITY.
Further, in no event shall liability of Omron Companies exceed the individual price of the Product on which liability is asserted.

Suitability of Use.
Omron Companies shall not be responsible for conformity with any standards, codes or regulations which apply to the combination of the Product in the Buyer's application or use of the Product. At Buyer's request, Omron will provide applicable third party certification documents identifying ratings and limitations of use which apply to the Product. This information by itself is not sufficient for a complete determination of the suitability of the Product in combination with the end product, machine, system, or other application or use. Buyer shall be solely responsible for determining appropriateness of the particular Product with respect to Buyer's application, product or system. Buyer shall take application responsibility in all cases.
NEVER USE THE PRODUCT FOR AN APPLICATION INVOLVING SERIOUS RISK TO LIFE OR PROPERTY OR IN LARGE QUANTITIES WITHOUT ENSURING THAT THE SYSTEM AS A WHOLE HAS BEEN DESIGNED TO ADDRESS THE RISKS, AND THAT THE OMRON PRODUCT(S) IS PROPERLY RATED AND INSTALLED FOR THE INTENDED USE WITHIN THE OVERALL EQUIPMENT OR SYSTEM.

Programmable Products.
Omron Companies shall not be responsible for the user's programming of a programmable Product, or any consequence thereof.

Performance Data.
Data presented in Omron Company websites, catalogs and other materials is provided as a guide for the user in determining suitability and does not constitute a warranty. It may represent the result of Omron's test conditions, and the user must correlate it to actual application requirements. Actual performance is subject to the Omron's Warranty and Limitations of Liability.

Change in Specifications.
Product specifications and accessories may be changed at any time based on improvements and other reasons. It is our practice to change part numbers when published ratings or features are changed, or when significant construction changes are made. However, some specifications of the Product may be changed without any notice. When in doubt, special part numbers may be assigned to fix or establish key specifications for your application. Please consult with your Omron's representative at any time to confirm actual specifications of purchased Product.

Errors and Omissions.
Information presented by Omron Companies has been checked and is believed to be accurate; however, no responsibility is assumed for clerical, typographical or proofreading errors or omissions.

2018.3

In the interest of product improvement, specifications are subject to change without notice.

OMRON Corporation
Industrial Automation Company

http://www.ia.omron.com/

(c)Copyright OMRON Corporation 2018 All Right Reserved.