MicroHAWK F430-F
Smart Camera

World's smallest fully-integrated vision system.

- Simple programming with AutoVISION.
- Highly configurable.
- 0.3, 1.2, and 5 megapixel sensor available.
- Fixed Focus and Autofocus lens options.
- Alternate LED configuration available.
- Smallest in class.
- IP65 / IP67.
- Ethernet and Power / I/O cables.
- Digital I/O, Ethernet TCP/IP, EtherNet/IP, PROFINET.

3) F430-F 1.2 MP Monochrome Autofocus High Bright LED Cameras

Appearance	Part Number	Description
	F430-F000W12M-HRA	F430, AF, WIDE, 1.2M, HIGH BRIGHT RED LIGHT, AUTOVISION
	F430-F000M12M-HRA	F430, AF, MEDIUM, 1.2M, HIGH BRIGHT RED LIGHT, AUTOVISION
	F430-F000N12M-HRA	F430, AF, NARROW, 1.2M, HIGH BRIGHT RED LIGHT, AUTOVISION
	F430-F000L12M-HRA	F430, AF, LONG, 1.2M, HIGH BRIGHT RED LIGHT, AUTOVISION
	F430-F000M12M-DRA	F430, AF, MEDIUM, 1.2M, HIGH BRIGHT DIFFUSED RED RING, AUTOVISION
	F430-F000N12M-DRA	F430, AF, NARROW, 1.2M, HIGH BRIGHT DIFFUSED RED RING, AUTOVISION
	F430-F000L12M-DRA	F430, AF, LONG, 1.2M, HIGH BRIGHT DIFFUSED RING, AUTOVISION

F430-F

System Configuration

Ethernet Configuration 1

Input commands and output results via Ethernet.
Triggers can be input using the I/O cable (Flying Leads Cable).

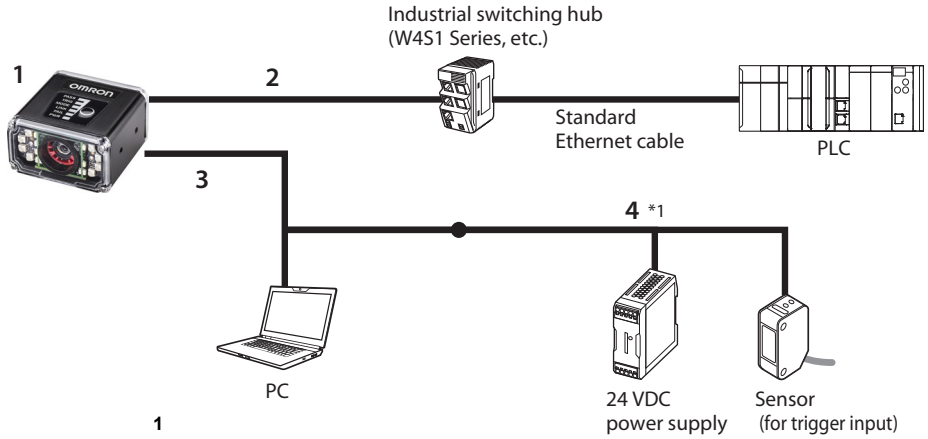

Drawing Reference	Description	Part Number
1	Smart Camera	F430-F
2	Ethernet Cable	V430-WE-1M/-3M/-5M V430-WELU-3M V430-WELD-3M
3	M12 to Flying Leads Cable	V430-WQK-3M
4	I/O Cable (Flying Leads Cable)	V430-W8-3M/-5M V430-W8F-3M/-5M V430-W8LU-3M V430-W8LUF-3M V430-W8LD-3M V430-W8LDF-3M

*1. The V430-WQ Cable (excluding V430-WQR and V430-WQK) can be used as an extension of the V430-W8 Cable.

Ethernet Configuration 2

Input commands and output results via Ethernet.
Triggers can be input using the I/O cable (Flying Leads Cable).

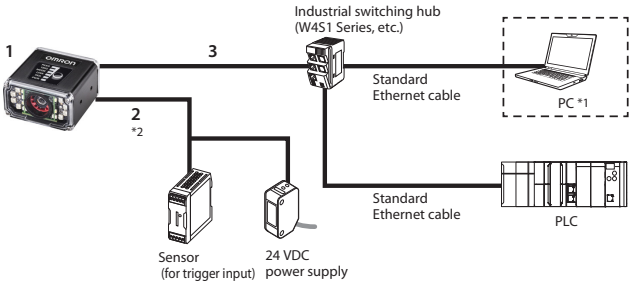

Drawing Reference	Description	Part Number
1	Smart Camera	F430-F
2	I/O Cable (Flying Leads Cable)	V430-W8-3M/-5M V430-W8F-3M/-5M V430-W8LU-3M V430-W8LUF-3M V430-W8LD-3M V430-W8LDF-3M
3	Ethernet Cable	V430-WE-1M/-3M/-5M V430-WELU-3M V430-WELD-3M

*1. Connect a PC during operation when you need to display information on the monitor.
*2. The V430-WQ Cable (excluding V430-WQR and V430-WQK) can be used as an extension of the V430-W8 Cable.

I/O Interface

Input triggers and output judgment results via I/O.

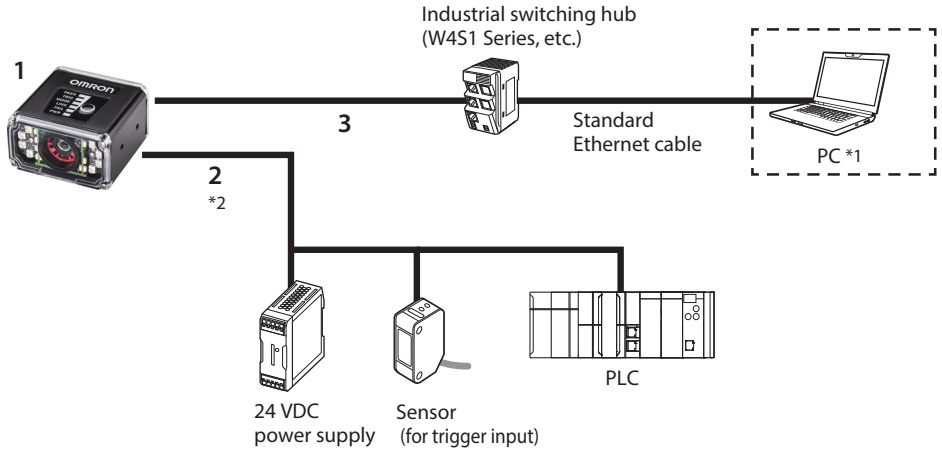

Drawing Reference	Description	Part Number
1	Smart Camera	F430-F
2	I/O Cable (Flying Leads Cable)	V430-W8-3M/-5M V430-W8F-3M/-5M V430-W8LU-3M V430-W8LUF-3M V430-W8LD-3M V430-W8LDF-3M
3	Ethernet Cable	V430-WE-1M/-3M/-5M V430-WELU-3M V430-WELD-3M

*1. Connect a PC during operation when you need to display information on the monitor.

*2. The V430-WQ Cable (excluding V430-WQR and V430-WQK) can be used as an extension of the V430-W8 Cable.

RS-232C Configuration 1

Input commands and output results via RS-232C.
Triggers can be input using the V430-W8 Cable.

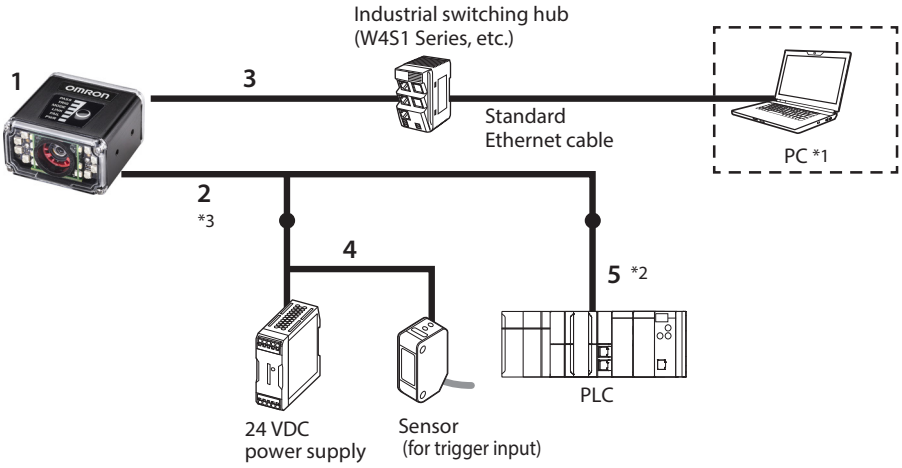

Drawing Reference	Description	Part Number
1	Smart Camera	F430-F
2	Camera to QX-1 Interconnect Cables with RS-232 Breakout	V430-WQR-3M
3	Ethernet Cable	V430-WE-1M/-3M/-5M V430-WELU-3M V430-WELD-3M
4	I/O Cable (Flying Leads Cable)	V430-W8-3M/-5M V430-W8F-3M/-5M V430-W8LU-3M V430-W8LUF-3M V430-W8LD-3M V430-W8LDF-3M
5	RS-232C Cable for connecting Omron's CS/CJ/NJ Controller	V430-WPLC-2M

*1. Connect a PC during operation when you need to display information on the monitor.

*2. The RS-232C cable is required to connect Omron's CS/CJ/NJ Controller. No additional RS-232C cable is required to connect Omron's NX Machine Automation Controller.

*3. The V430-WQ Cable can be used as an extension of the V430-W8 Cable.

RS-232C Configuration 2

Input commands and output results via RS-232C.
Triggers can be input using the V430-W8 Cable.

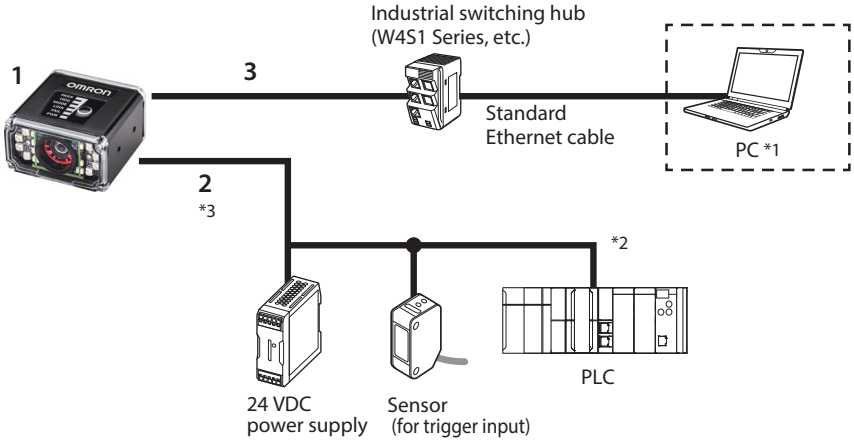

Drawing Reference	Description	Part Number
1	Smart Camera	F430-F
2	I/O Cable (Flying Leads Cable)	V430-W8-3M/-5M V430-W8F-3M/-5M V430-W8LU-3M V430-W8LUF-3M V430-W8LD-3M V430-W8LDF-3M
3	Ethernet Cable	V430-WE-1M/-3M/-5M V430-WELU-3M V430-WELD-3M

*1. Connect a PC during operation when you need to display information on the monitor.
*2. Check the connector shape and signal lines (pin assignment) of the PLC before preparing the V430-W8 Cable.
*3. The V430-WQ Cable can be used as an extension of the V430-W8 Cable.

Mounting Options

Appearance	Description	Part Number
	L Bracket Adjustable Angle Mounting Kit	**V430-AM0**
	¼-20 Camera Mounting Block Kit	**V430-AM1**
	4” (102 mm) Ram Mount Stand	**V430-AM2**
	APG Pan and Tilt Camera Mount	**V430-AM3**
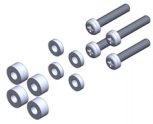	Nylon Screw and Washer Electrical Isolation Mounting Kit	**V430-AM4**
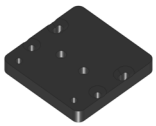	MS-4 / MINI to V/F4XX-F Adapter Plate	**V430-AM5**
	Smart Ring Light to V/F4XX-F Mounting Bracket	**V430-AM6**
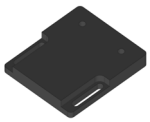	QX / Vision HAWK to V/F4XX-F Adapter Plate	**V430-AM7**

Optics Options

Appearance	Description	Part Number
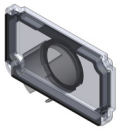	Front Window – Installation Kit	**V430-AF10 ✻**
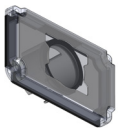	Diffuser – Installation Kit	**V430-AF11 ✻**
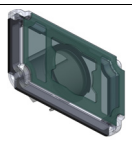	Polarizer – Installation Kit	**V430-AF12 ✻**
	Right Angle Mirror – Installation Kit	**V430-AF3**
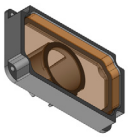	YAG Filter – Installation Kit	**V430-AF4**
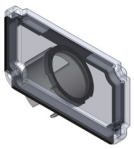	ESD-Safe Window – Installation Kit	**V430-AF5**
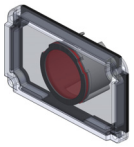	Red Filter – Installation Kit	**V430-AF6**
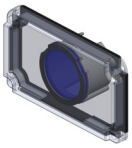	Blue Filter – Installation Kit	**V430-AF7**

✻ **Note:** V430-AF10, AF11, and AF12 are used for **MicroHAWK V/F4X0-FXXXXXXX-XXX** cameras in this datasheet. The prior generation **MicroHAWK V430-FXXXXXXX** code reader uses part numbers V430-AF0, AF1, and AF2. Please select the correct accessory from the table based on your camera part number format.

Accessory	Prior V430-FXXXXXXX Code Reader	New V/F4X0-FXXXXXXX-XXX Code Reader and Smart Camera
Front Window Installation Kit	V430-AF0	V430-AF10
Diffuser Installation Kit	V430-AF1	V430-AF11
Polarizer Installation Kit	V430-AF2	V430-AF12

Additional Optics Options

Options	Appearance	Description	Part Number
F430-F Window Kits		Ring Light Front Window Installation Kit	**V430-AF0R**
	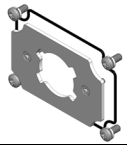	Ring Light Diffuser Installation Kit	**V430-AF1R**
	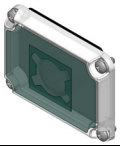	Ring Light Polarizer Installation Kit	**V430-AF2R**

Lighting Options

Options	Appearance	Description	Part Number
F430-F Ring Light Kits	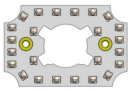	Red Ring Light Installation Kit	**V430-ALRR**
		White Ring Light Installation Kit	**V430-ALWR**
		Blue Ring Light Installation Kit	**V430-ALBR**
		IR Ring Light Installation Kit	**V430-ALIR**
F430-F High Bright Ring Light Kits	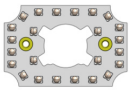	High Bright Red Ring Light Installation Kit (3.3x brighter than standard Red Ring Light)	**V430-ALRRH**
		Ring Light Window with Heavy Diffuser Kit (Creates very uniform lighting for DPM. Pair with V430-ALRRH for best results.)	**V430-AF1RH**

Additional Lighting Options

Options	Appearance	Description	Part Number
Standard Light Kits	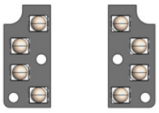	Red Light Installation Kit	**V430-ALR**
		White Light Installation Kit	**V430-ALW**
		Blue Light Installation Kit	**V430-ALB**
		IR Light Installation Kit	**V430-ALI**
High Bright Light Kit	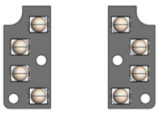	High Bright Red Light Installation Kit (1.8x brighter than standard Red Light Installation Kit)	**V430-ALRH**

Wiring Options

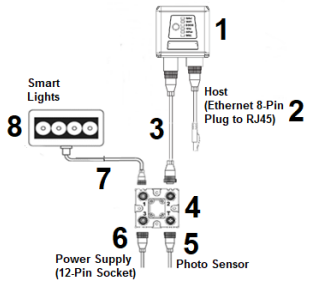

Drawing Reference	Appearance	Description	Length / Spec	Part Number
2		Ethernet Communication Cables - Straight Connectors M12 Plug on Camera to RJ45 connector	1 Meter	**V430-WE-1M**
			3 Meters	**V430-WE-3M**
			5 Meters	**V430-WE-5M**
	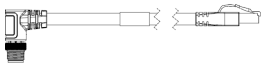	Ethernet Comm. Cable - Right Angle M12 Connectors* M12 Plug on Camera to RJ45	3 Meters - Right Angle Up*	**V430-WELU-3M**
			3 Meters - Right Angle Down*	**V430-WELD-3M**
3		Camera to QX-1 Interconnect Cables M12 Socket to M12 Plug QX-1 is used as breakout Module for common IO signals and power.	1 Meter	**V430-WQ-1M**
	 Note: The Power Filter cable can be used with the cable from the diagram, or used on its own.	M12 Socket to M12 Plug, with Power Filter	300 mm	**V430-WQF-1M**
		Camera to QX-1 Interconnect Cables M12 Socket to M12 Plug QX-1 is used as breakout Module for common IO signals and power.	3 Meters	**V430-WQ-3M**
			5 Meters	**V430-WQ-5M**
4		QX-1 Interconnect Module – Power, Trigger, Smart Light Control Breakout		**98-000103-02**
5		QX-1 Photo Sensor, M12 4-Pin Plug, NPN	2 Meter - Light ON/Dark ON	**99-9000016-01**
		QX-1 Field-Wireable M12 4-Pin Plug for any trigger source or photo sensor	Screw Terminals	**98-9000239-01**
6		Power Supply, 100-240VAC, +24VDC, M12 12-Pin Socket	1 Meter US/Euro Plug	**97-000012-01**
7		QX-1 M12 to Smart Light Power and Strobe Control Cables M12 Plug on QX-1 to 5 Pin Socket on light	3 Meter - Continuous Power	**61-000204-01**
			3 Meter - Strobe Control	**61-000218-01**
8		Omron Microscan Smart Light Series	Integrated Power and Strobe Control Module	**See Omron Microscan Smart Light Offering - Ring, DOAL, Large Area Lighting**

* Right angle cables.

Right angle up

Right angle down

Alternate Wiring Options

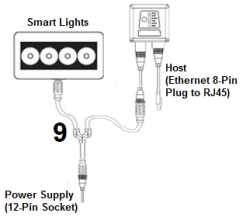

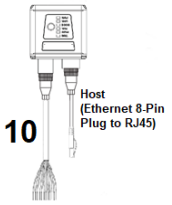

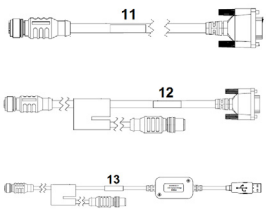

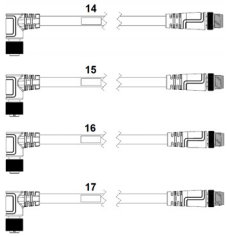

Drawing Reference	Appearance	Description	Length / Spec	Part Number
9	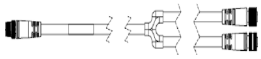	Y Cable, Camera/Power and Smart Light Power (Continuous On)	1 Meter	**61-9000135-01**
		Y Cable, Camera/Power and Smart Light Strobe Control	1 Meter	**61-9000137-01**
10	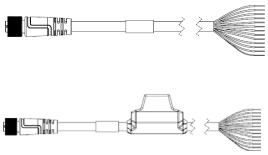	M12 to Flying Leads Cable, Straight Power, IO, RS-232, USB	3 Meters	**V430-W8-3M**
		M12 to Flying Leads Cable, with Power Filter		**V430-W8F-3M**
		M12 to Flying Leads Cable, Straight Power, IO, RS-232, USB	5 Meters	**V430-W8-5M**
		M12 to Flying Leads Cable, with Power Filter		**V430-W8F-5M**
		M12 to Flying Leads Cable, Straight Power, IO, RS-232, USB	10 Meters	**V430-W8-10M**
	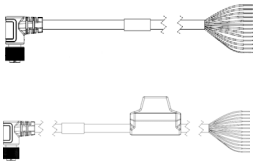	M12 to Flying Leads Cable Right Angle Power, IO, RS232, USB	3 Meters – Right Angle Up	**V430-W8LU-3M**
		M12 to Flying Leads Cable Right Angle, with Power Filter		**V430-W8LUF-3M**
		M12 to Flying Leads Cable Right Angle Power, IO, RS232, USB	3 Meters – Right Angle Down	**V430-W8LD-3M**
		M12 to Flying Leads Cable Right Angle, with Power Filter		**V430-W8LDF-3M**
11		M12 to RS-232 Breakout	1 Meter	**V430-WR-1M**
			3 Meters	**V430-WR-3M**
12		Camera to QX-1 Interconnect Cables with RS-232 Breakout	2.7 Meters	**V430-WQR-3M**
13		Camera to QX-1 Interconnect Cables with USB Keyboard Wedge Breakout	2.7 Meters	**V430-WQK-3M**
14		M12 12-Pin Plug to M12 12-Pin Socket, Right Angle	3 Meters	**61-000148-03**
15		M12 12-Pin Plug to M12 12-Pin Socket, Right Angle, Alternate Key	3 Meters	**61-000148-04**
16		M12 12-Pin Plug to M12 12-Pin Socket, Right Angle	1 Meter	**61-000162-03**
17		M12 12-Pin Plug to M12 12-Pin Socket, Right Angle, Alternate Key	1 Meter	**61-000162-04**
18		Cable, Adapter, Omron PLC	2 Meters	**V430-WPLC-2M**

Verification Options

Appearance	Description	Part Number
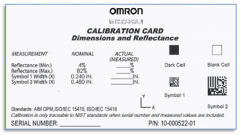	AutoVISION Verification Calibration Card with NIST-Traceable Measurement Report	**98-000265-01**
	AutoVISION Verification Calibration Card	**98-000265-02**

F430-F Part Number Structure

Use this legend when defining product part numbers. Please note that not all combinations of parameters are valid. For instance, color cameras are only available with white lighting, and 400 mm fixed focus is only available with UHD lenses. When ordering, use valid part numbers from the tables in the Ordering Information section only.

F430-F[XXX][Y][ZZZ]-[L][C][P]

Key	Classification	Code	Meaning
XXX	Focus Distance (mm)	000	Autofocus – Variable Distance
		050	Fixed Focus at 50 mm
		064	Fixed Focus at 64 mm
		081	Fixed Focus at 81 mm
		102	Fixed Focus at 102 mm
		133	Fixed Focus at 133 mm
		190	Fixed Focus at 190 mm
		300	Fixed Focus at 300 mm
		400	Fixed Focus at 400 mm
Y	Lens	W	Wide Field of View – 5.2 mm Focal Length Lens
		M	Medium Field of View – 7.7 mm Focal Length Lens
		N	Narrow Field of View – 16 mm Focal Length Lens
		L	Narrow 16 mm Lens – Autofocus to 1160 mm
ZZZ	Sensor	03M	752 x 480 (0.3 MP) Pixel, Mono Sensor, Global Shutter
		12M	1280 x 960 (1.2 MP) Pixel, Mono Sensor, Global Shutter
		50C	2592 x 1944 (5 MP) Pixel, Color Sensor, Rolling Shutter
L	Light Type	N	None (Engine Lighting Only)
		S	Standard Outer Light
		H	High Bright Outer Light
		R	Ring Light
		D	High Bright Diffused Red Ring Light
C	Light Color	N	None (Engine Lighting Only)
		R	Red
		W	White
P	Software License	S	AutoVISION Sensor (Vision Toolset Only)
		A	AutoVISION (Vision and Code Reading / Verification Toolsets)
		V	Visionscape (Full AutoVISION and Visionscape Toolsets)

Example Part Numbers:

- F430-F081W03M-NNS: Fixed Focus at 81 mm, Wide Lens, 0.3 MP Monochrome Sensor, No Outer Light, AutoVISION Sensor
- F430-F000N12M-RRA: Autofocus, Narrow Lens, 1.2 MP Mono, Ring Light, Red, AutoVISION + Verification

F430-F Valid Product Matrix

Model	Category	Focus Type	Sensor	Lens	Focus Distance (mm)	Light	License
F430-F	Monochrome	Fixed Focus	03M, 12M	W, M	50, 81, 102, 190, 300	NN, SR, SW	S, A, V
			12M	N	400	NN, SR, SW	S, A, V
		Autofocus	03M	W, M	50 <-> 300 Autofocus	NN, SR, SW	S, A, V
			12M	W, M, N	50 <-> 300 (W and M) 40 <-> 150 (N) Autofocus	NN, SR, SW	S, A, V
	Color	Fixed Focus	50C	W, M	50, 81, 102, 190, 300	NN, SR, SW	S, A, V
		Autofocus	50C	W, M	50 <-> 300 Autofocus	NN, SR, SW	S, A, V
	Specialty	Ring Light Autofocus	12M	M, N	50 <-> 300 (M) 40 <-> 150 (N) Autofocus	RR, RW	S, A, V
		Long Range Autofocus	12M	L	75 <->1160 Autofocus	NN, SR, SW	S, A, V

F430-F Ordering Information

Categories:

1. Fixed Focus Camera

a.) F430-F Monochrome Fixed Focus Camera

b.) F430-F Color Fixed Focus Camera

c.) F430-F 1.2 MP Monochrome Fixed Focus Camera with Narrow Lens

2. Autofocus Camera

a.) F430-F 0.3 MP Monochrome Autofocus Camera (50 – 300 mm)

b.) F430-F 1.2 MP Monochrome Autofocus Camera (50 – 300 mm for Wide and Medium Lens, 40 – 150 mm for Narrow Lens)

c.) F430-F Color Autofocus Camera (50 - 300 mm)

d.) F430-F 1.2 MP Monochrome Autofocus Camera with Ring Light (50 – 300 mm for Medium Lens, 40 – 150 mm for Narrow Lens)

e.) F430-F 1.2 MP Monochrome Long Range Autofocus Camera (75 - 1160 mm)

3. Autofocus Cameras with High Bright LEDs

1a) F430-F Monochrome Fixed Focus Camera: Valid Combinations

F430-F[XXX][Y][ZZZ]-[L][C][P]

Key	Classification	Code	Meaning
XXX	Focus Distance (mm)	050	Fixed Focus at 50 mm
		081	Fixed Focus at 81 mm
		102	Fixed Focus at 102 mm
		190	Fixed Focus at 190 mm
		300	Fixed Focus at 300 mm
Y	Lens	W	Wide Field of View - 5.2 mm Focal Length Lens
		M	Medium Field of View – 7.7 mm Focal Length Lens
ZZZ	Sensor	03M	752 x 480 (0.3 MP) Pixel, Mono Sensor, Global Shutter
		12M	1280 x 960 (1.2 MP) Pixel, Mono Sensor, Global Shutter
L	Light Type	N	No Outer Light
		S	Standard Outer Light
C	Light Color	N	No Outer Light
		R	Red
		W	White
P	Software License	S	AutoVISION Sensor (Vision Toolset Only)
		A	AutoVISION (Vision and Code Reading / Verification Toolsets)
		V	Visionscape (Full AutoVISION and Visionscape Toolsets)

1b) F430-F 5.0 MP Color Fixed Focus Camera: Valid Combinations

Note: 5 MP Color cameras are available with No or White light options only.

F430-F[XXX][Y]**50C**-[L][C][P]

Key	Classification	Code	Meaning
XXX	Focus Distance (mm)	050	Fixed Focus at 50 mm
		081	Fixed Focus at 81 mm
		102	Fixed Focus at 102 mm
		190	Fixed Focus at 190 mm
		300	Fixed Focus at 300 mm
Y	Lens	W	Wide Field of View - 5.2 mm Focal Length Lens
		M	Medium Field of View – 7.7 mm Focal Length Lens
L	Light Type	N	No Outer Light
		S	Standard Outer Light
C	Light Color	N	No Outer Light
		W	White
P	Software License	S	AutoVISION Sensor (Vision Toolset Only)
		A	AutoVISION (Vision and Code Reading / Verification Toolsets)
		V	Visionscape (Full AutoVISION and Visionscape Toolsets)

1c) F430-F 1.2 MP Monochrome Fixed Focus Camera with Narrow Lens: Valid Combinations

Note: Fixed Focus Narrow lens option available for 1.2 MP Mono camera only.

F430-F[XXX]**N12M**-[L][C][P]

Key	Classification	Code	Meaning
XXX	Focus Distance (mm)	400	Fixed Focus at 400 mm
L	Light Type	N	No Outer Light
		S	Standard Outer Light
C	Light Color	N	No Outer Light
		R	Red
		W	White
P	Software License	S	AutoVISION Sensor (Vision Toolset Only)
		A	AutoVISION (Vision and Code Reading / Verification Toolsets)
		V	Visionscape (Full AutoVISION and Visionscape Toolsets)

2a) F430-F 0.3 MP Monochrome Autofocus Cameras (50 – 300 mm): Valid Combinations

F430-F000[Y]**03M**-[L][C][P]

Key	Classification	Code	Meaning
Y	Lens	W	Wide Field of View - 5.2 mm Focal Length Lens
		M	Medium Field of View – 7.7 mm Focal Length Lens
L	Light Type	N	No Outer Light
		S	Standard Outer Light
C	Light Color	N	No Outer Light
		R	Red
		W	White
P	Software License	S	AutoVISION Sensor (Vision Toolset Only)
		A	AutoVISION (Vision and Code Reading / Verification Toolsets)
		V	Visionscape (Full AutoVISION and Visionscape Toolsets)

2b) F430-F 1.2 MP Monochrome Autofocus Camera (50 – 300 mm for Wide and Medium, 40 – 150 mm for Narrow): Valid Combinations

F430-F000[Y]**12M**-[L][C][P]

Key	Classification	Code	Meaning
Y	Lens	W	Wide Field of View - 5.2 mm Focal Length Lens
		M	Medium Field of View – 7.7 mm Focal Length Lens
		N	Narrow Field of View – 16 mm Focal Length Lens
L	Light Type	N	No Outer Light
		S	Standard Outer Light
C	Light Color	N	No Outer Light
		R	Red
		W	White
P	Software License	S	AutoVISION Sensor (Vision Toolset Only)
		A	AutoVISION (Vision and Code Reading / Verification Toolsets)
		V	Visionscape (Full AutoVISION and Visionscape Toolsets)

2c) F430-F 5.0 MP Color Autofocus Camera (50 - 300 mm): Valid Combinations

Note: Narrow Autofocus lens option not available for color camera.

F430-F000[Y]**50C**-[L][C][P]

Key	Classification	Code	Meaning
Y	Lens	W	Wide Field of View - 5.2 mm Focal Length Lens
		M	Medium Field of View – 7.7 mm Focal Length Lens
L	Light Type	N	No Outer Light
		S	Standard Outer Light
C	Light Color	N	No Outer Light
		W	White
P	Software License	S	AutoVISION Sensor (Vision Toolset Only)
		A	AutoVISION (Vision and Code Reading / Verification Toolsets)
		V	Visionscape (Full AutoVISION and Visionscape Toolsets)

2d) F430-F 1.2 MP Monochrome Autofocus Camera with Ring Light (50 – 300 mm for Medium, 40 – 150 mm for Narrow): Valid Combinations

Note: Ring Light version is available for Autofocus, Medium, and Narrow lens, 1.2 MP Monochrome camera only.

F430-F000[Y]**12M-R**[C][P]

Key	Classification	Code	Meaning
Y	Lens	M	Medium Field of View – 7.7 mm Focal Length Lens
		N	Narrow Field of View – 16 mm Focal Length Lens
C	Light Color	R	Red
		W	White
P	Software License	S	AutoVISION Sensor (Vision Toolset Only)
		A	AutoVISION (Vision and Code Reading / Verification Toolsets)
		V	Visionscape (Full AutoVISION and Visionscape Toolsets)

2e) F430-F 1.2 MP Monochrome Long Range Autofocus Camera (75 - 1160 mm): Valid Combinations

Note: Autofocus Long Range lens option available for 1.2 MP Monochrome camera only.

F430-F000L12M-[L][C][P]

Key	Classification	Code	Meaning
L	Light Type	N	No Outer Light
		S	Standard Outer Light
C	Light Color	N	No Outer Light
		R	Red
		W	White
P	Software License	S	AutoVISION Sensor (Vision Toolset Only)
		A	AutoVISION (Vision and Code Reading / Verification Toolsets)
		V	Visionscape (Full AutoVISION and Visionscape Toolsets)

Field of View Charts

Specifications are subject to change.

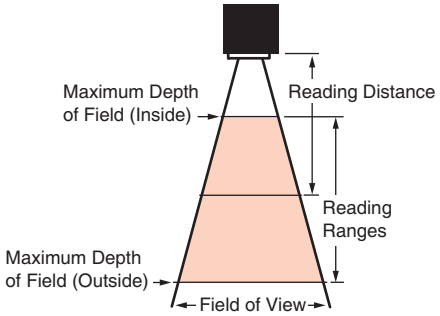

Fixed Focus Field of View (mm) - Wide Lens

	0.3 MP		1.2 MP		5 MP	
Distance (mm)	Width	Height	Width	Height	Width	Height
50	49	32	53	39	50	38
81	76	49	81	61	78	58
102	95	60	101	75	96	72
190	171	109	182	136	174	130
300	266	170	283	213	271	202

Fixed Focus Field of View (mm) - Medium Lens

	0.3 MP		1.2 MP		5 MP	
Distance (mm)	Width	Height	Width	Height	Width	Height
50	34	22	36	27	35	26
81	53	34	56	42	54	40
102	66	42	70	52	67	50
190	119	76	126	95	121	90
300	185	118	196	147	188	140

Fixed Focus Field of View (mm) - Narrow Lens

	1.2 MP	
Distance (mm)	Width	Height
400	118	88

Autofocus Field of View (mm) - Wide Lens

	0.3 MP		1.2 MP		5 MP	
Distance (mm)	Width	Height	Width	Height	Width	Height
50	51	33	55	41	52	39
100	97	62	103	77	98	73
150	142	90	151	113	144	107
200	187	119	199	149	190	142
250	232	148	247	185	236	176
300	277	177	295	221	282	210

Autofocus Field of View (mm) - Medium Lens

	0.3 MP		1.2 MP		5 MP	
Distance (mm)	Width	Height	Width	Height	Width	Height
50	33	21	36	27	34	25
100	63	40	67	50	64	48
150	92	59	98	73	94	70
200	121	77	129	97	123	92
250	151	96	160	120	153	114
300	180	115	191	144	183	136

Autofocus Field of View (mm) - Narrow Lens

	1.2 MP	
Distance (mm)	Width	Height
50	16	12
100	31	23
150	45	34

Long Range Autofocus Field of View (mm)

	1.2 MP	
Distance (mm)	Width	Height
75	24	18
100	31	23
200	60	45
300	89	67
400	118	88
500	147	110
600	176	132
700	204	153
800	233	175
900	262	197
1000	291	218
1200	349	262
1300	378	283
1400	407	305
1500	436	327

F430-F

Ratings and Specifications

F430-F		F430-F□□□□03M-□□□	F430-F□□□□12M-□□□	F430-F□□□□50C-□□□
Symbologies ✻1	1D Symbologies	Code 39, Code 128, BC412, Interleaved 2 of 5, UPC/EAN, Codabar, Code 93, Pharmacode, PLANET, Postnet, Japanese Post, Australian Post, Royal Mail, Intelligent Mail, KIX		
	2D Symbologies	Data Matrix (ECC 0-200), QR Code, Micro QR Code, Aztec Code, DotCode, DMRE		
	Stacked Symbologies	PDF417, MicroPDF417, GS1 Databar (Composite and Stacked)		
Reading Performance ✻2	Number of Reading Digits	No Upper Limit (depending on bar width and reading distance)		
	Aiming Light	Two Blue LEDs		
	Illumination	Inner LEDs: Four White and Four Red (Wavelength: 625 nm)		
		Outer LEDs: 8 Red or White	Outer LEDs: 8 Red or White; 24 Red or White for F430-F□□□□12M-R□□	Outer LEDs: 8 White
	Reading Distance / Field of View	Refer to *Field of View Charts* for details.		
	Pitch Angle (α) ✻3	±30°		
	Skew Angle (β) ✻3	±30°		
	Tilt Angle (γ) ✻3	±180°		
Vision Tools		Locate, Decode, Optical Character Recognition (OCR), Count, Presence/Absence, Measure, Match String, String Format, Logic, Optical Character Verification (OCV), Symbol Quality Verification, Color Identification, Color Match		
Image Capture	Focus	Liquid Lens Autofocus or Fixed Focus (Wide = 5.2 mm, Medium = 7.7 mm, Narrow = 16 mm, L = 16 mm)		
	Resolution	752 (H) x 480 (V)	1280 (H) x 960 (V)	2592 (H) x 1944 (V)
	Color / Monochrome	Monochrome CMOS	Monochrome CMOS	Color CMOS
	Shutter	Global Shutter	Global Shutter	Rolling Shutter
	Frames per Second	52 fps	40 fps	5 fps
	Exposure	50 to 66,667 µs	50 to 58,825 µs	50 to 66,667 µs
Image Logging		FTP		
Trigger		External Trigger (Edge or Level), Communication Trigger (Ethernet, RS-232C)		
I/O Specifications	Input Signals	3 Signals: Bi-Directional, Optoisolated, 4.5-28 V rated (10 mA @ 28 VDC)		
	Output Signals	3 Signals: Bi-Directional, Optoisolated, 1-28 V rated, (Current limited by user, < 100 mA at 24 VDC)		
Communication	Connectivity	RS-232C, Ethernet TCP/IP, EtherNet/IP, PROFINET		
	Ethernet Specifications	100BASE-TX / 10BASE-T		
Indicator LEDs		PASS (Green), TRIG (Amber), MODE (Amber), LINK (Amber), FAIL (Red), PWR (Green)		
Power Supply Voltage		DC24V (Voltage Range: DC10~30V) ✻5		
Current Consumption		0.18 A at 24 VDC (max.)		
Environmental/ Immunity✻4	Operating Temperature	0° to 45° C		
	Ambient Atmosphere	No Corrosive Gases		
	Storage Temperature	-40° to 75° C		
	Humidity (Operating and Storage)	5% to 95% (Non-Condensing)		
	Destructive Vibration Resistance	Sine Vibration: 10 Hz to 55 Hz, 0.35 mm displacement, 20 cycles/axis. Random Vibration: 20 Hz to 2000 Hz, 0.02G^2/Hz for 30 minutes		
	Shock Resistance	50 G, 11 ms		
	Water Resistance Rating	IP65 and IP67 per IEC 60529		
Weight	Main Body Only	Approx. 68 g		
	Packaging Weight	Approx. 174 g (including packing)		
Dimensions	Main Body Dimensions	44.5 (W) × 44.5 (D) × 25.4 (H) mm		
	Packaging Dimensions	170 (W) × 117 (D) × 86 (H) mm		
Accessories		ReadMeFirst, CE Compliance Sheet		
LED Safety Standard		IEC 62471-1: 2006 Risk-Exempt Group		
EMC Standards - TM&C (MACHINE VISION)		FCC 47 CFR PART 15 Subpart B, ICES-003, EN61326-1, KN32, KN35,CNS13438		
Safety Standards - TM&C (MACHINE VISION)		UL 62368-1, UL 60950-1, IEC 62471-1, CAN/CSA C22.2, IS 13252		
Regulatory Marks - TM&C (MACHINE VISION)		FCC, UL, cUL (Canada), CE (EU), BIS (India), BSMI (Taiwan), KC (S. Korea), RCM (Australia/NZ)		
Materials	Case	Aluminum		
	Reading Window	Acrylic		
Software		AutoVISION, Visionscape FrontRunner		

*1. These symbologies are supported based on Omron's read capability validation standard. Omron recommends that validation be performed for each application.
*2. Unless otherwise specified, reading performance is defined with center of field of view, angle R=∞.
*3.

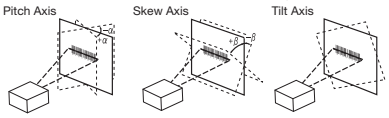

*4. In an electrically noisy environment, use only the F430-F in combination with a noise filter cable (V430-W□F-□M) to ensure proper operation.
*5. UL certification rating is DC24V. Maximum ripple is 200 mV p-p.

Product Dimensions

(Unit: mm)

F430-F

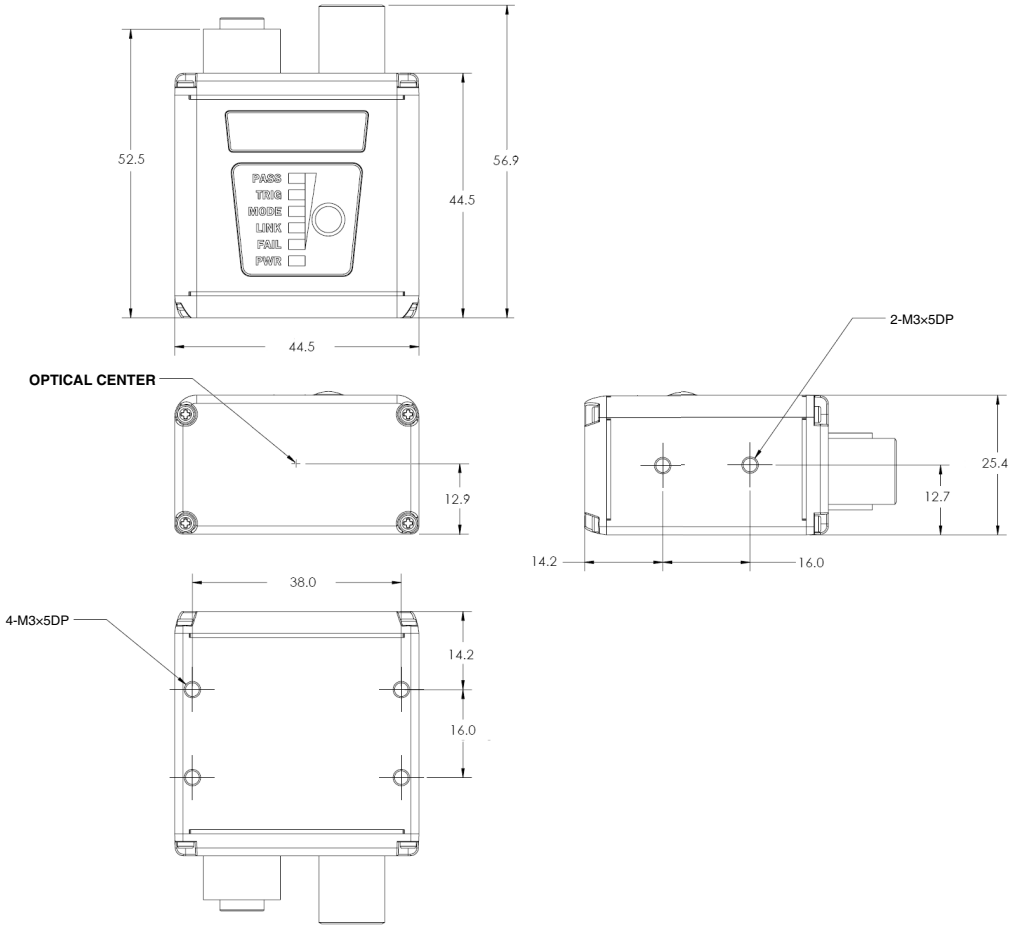

F430-F with Alternate Optics and Illumination

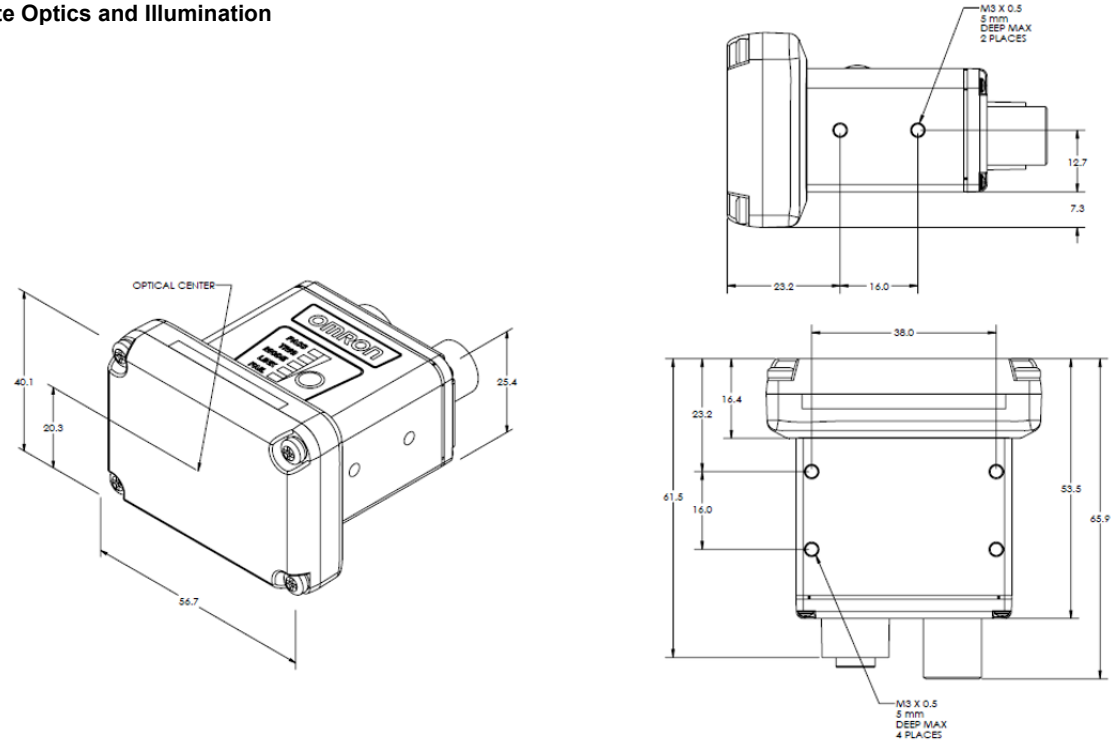

Mounting Information

General Note: Recommended torque for all M3 mounting holes: 0.5 - 1.0 NM.

L Bracket Adjustable Angle Mounting Kit
V430-AM0

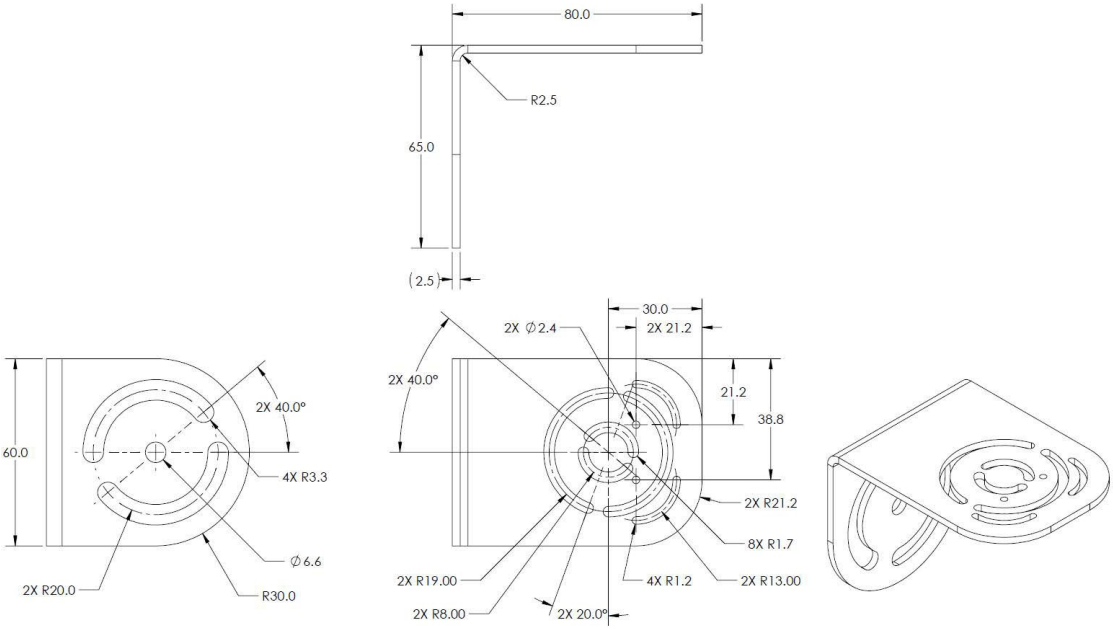

Kit Contents:

- L Bracket, SUS304 (1)
- M3 X 6mm SS Phillips screws (2)
- M2 X 6mm SS Phillips screws (2)
- Flat Washer, SS, size M3 (2)
- Flat Washer, SS, size M2 (2)

Recommended Tools and Hardware (not included):

- Phillips torque driver

Installation Notes: For F430 cameras, the M2 screws and washers are not necessary to use. Use only the M3-sized hardware. The F430 product can be mounted in two different orientations using this L bracket by mounting to the bottom or the side of the camera.

(Unit: mm)

¼-20 Camera Mounting Block Kit
V430-AM1

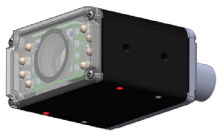

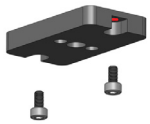

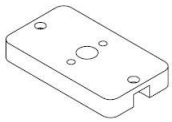

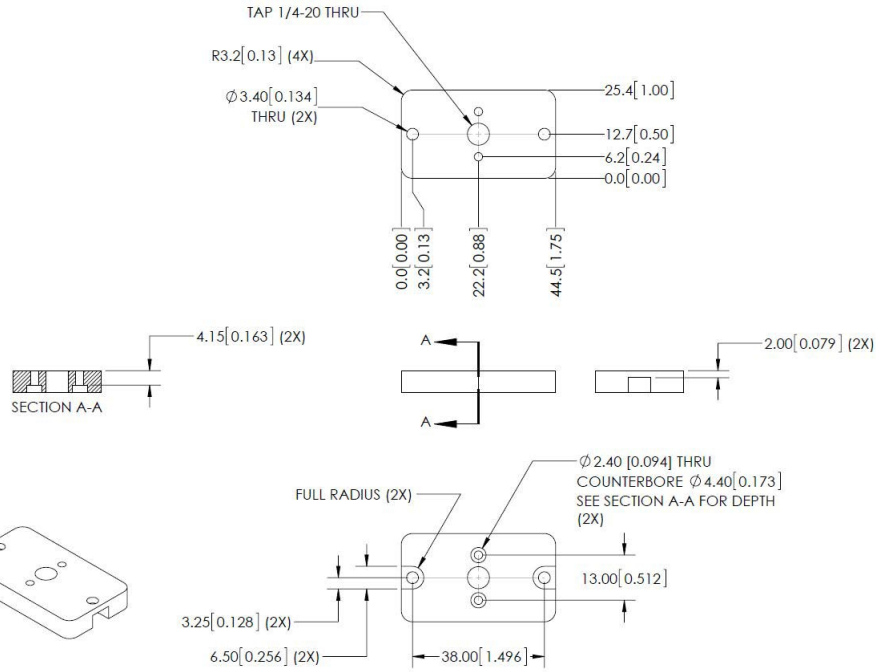

Kit Contents:

- Mounting Block, Aluminum alloy (1)
- M3 X 6mm SS Socket screws (2)
- M2 X 8mm SS Socket screws (2)

Recommended Tools and Hardware (not included):

- Torque wrench

Installation Notes: For F430 cameras, the M2 screws are not necessary to use. Use only the M3-sized hardware.

4” (102 mm) Ram Mount Stand
V430-AM2

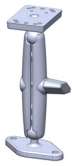

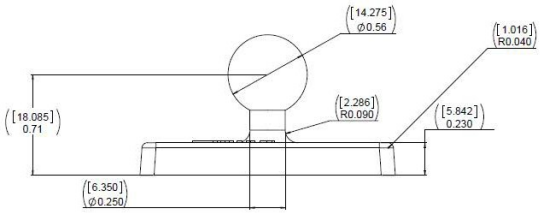

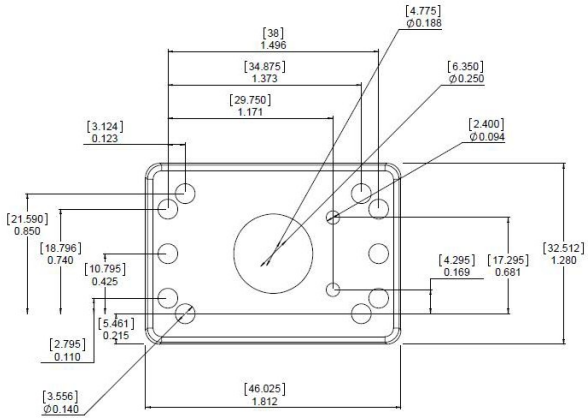

Kit Contents:

- Diamond Ball Base (1)
- Double Socket Arm (1)
- Base Plate (1)
- M2 X 10mm SS Phillips screws (2)
- M3 X 10mm SS Phillips screws (4)
- M4 X 10mm SS Phillips screws (2)
- Split Washer, SS, size #3 (2)
- Split Washer, SS, size M3 (4)
- Split Washer, SS, size M4 (2)

Recommended Tools and Hardware (not included):

- Phillips torque driver

Note: Dimensions for the diamond ball base and the double socket arm can be found at the manufacturer’s website at:

Diamond ball base: https:// www.rammount.com/part/ RAM-A-238U
Double socket arm: https:// www.rammount.com/part/ RAM-A-201U-B

Installation Notes: For F430 cameras, the M2 and M4 screws and #3 and M4 washers are not necessary to use. Use only the M3-sized hardware. The F430 product can be mounted in two different orientations using this mounting system by mounting the base plate to the bottom or the side of the camera.

APG Pan and Tilt Camera Mount
V430-AM3

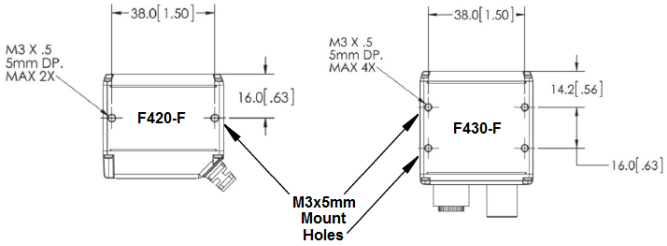

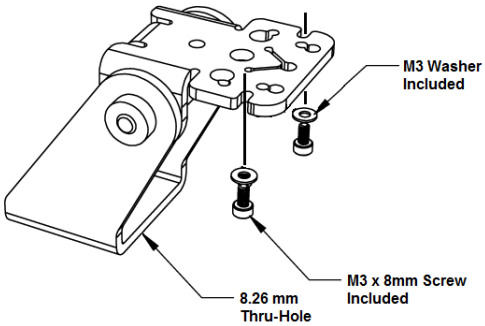

Kit Contents:

- APG Mount, Stainless steel (1)
- Flat Washers, SS, size M3 (2)
- Flat Washers, SS, oversized (2)
- M2 X 8mm SS Socket screws (2)
- M3 X 8mm SS Socket screws (2)

Recommended Tools and Hardware (not included):

- Torque wrench

Note: Dimensions for the base and arm can be found on the manufacturer's website at: apgvision.com. For F430 cameras, the M2 screws and oversized washers are not necessary to use. Use only the M3-sized hardware.

Nylon Screw and Washer Electrical Isolation Kit
V430-AM4

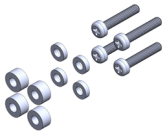

Kit Contents:

- M3 X 16mm Phillips nylon screw (4)
- Nylon Washer, size M3, 1.6mm thick
- Nylon Washer, size M3, 3.6mm thick

Recommended Tools and Hardware (not included):

- Torque wrench

MS-4 / MINI to V/F4XX-F Adapter Plate
V430-AM5

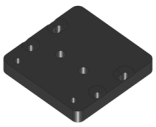

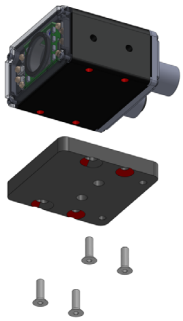

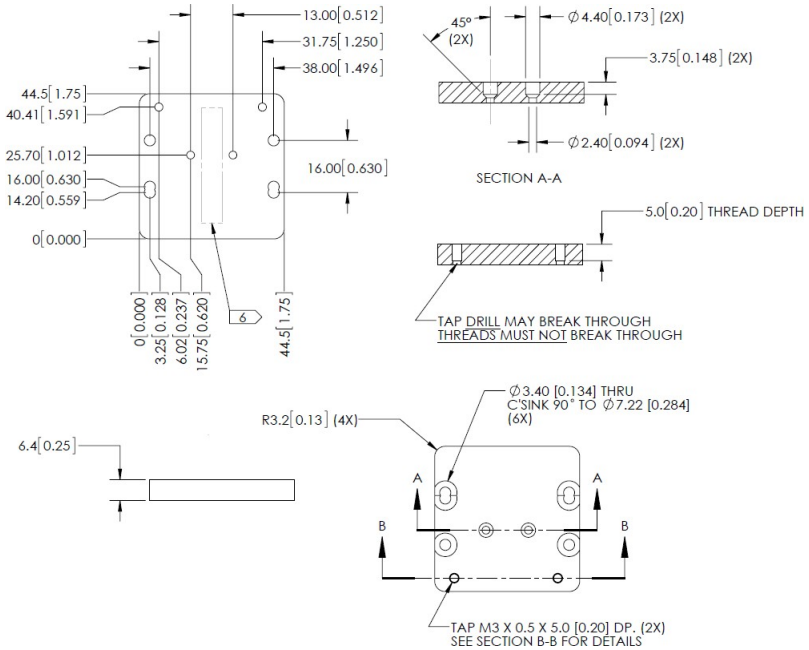

Kit Contents:

- Adapter Plate, Aluminum alloy (1)
- M3 X 10mm SS Socket screws (4)
- M2 X 6mm SS Phillips screws (2)

Recommended Tools and Hardware (not included):

- Torque wrench

Installation Notes: For F430 cameras, the M2 screws are not necessary to use. Use only the M3-sized hardware.

Smart Ring Light to V/F4XX-F Mounting Bracket
V430-AM6

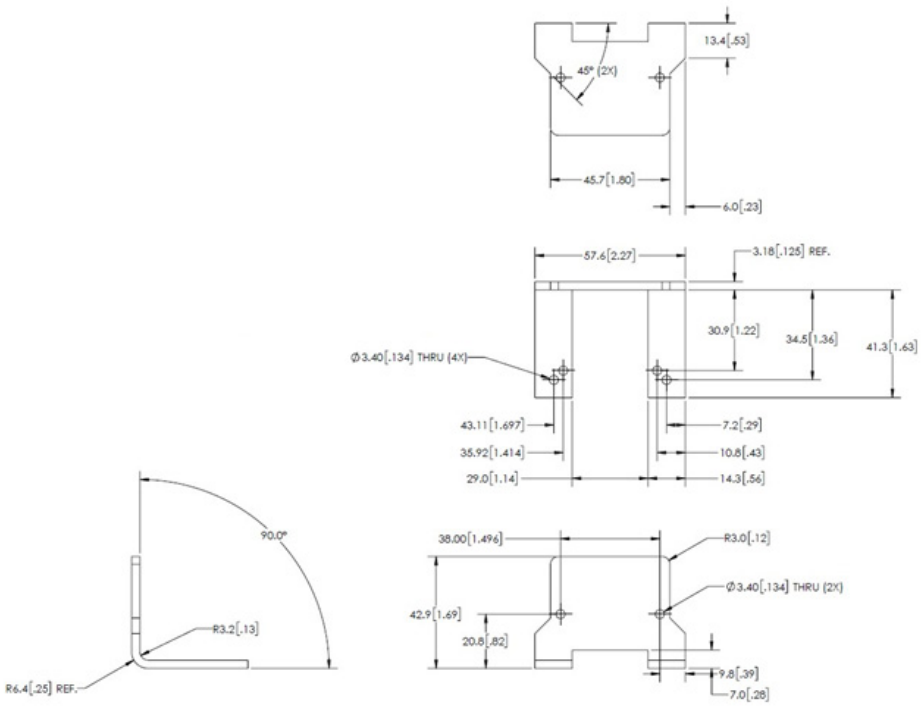

Kit Contents:

- Mounting Bracket, Aluminum alloy (1)
- M3 X 6mm Phillips screws (2) [mounts the ring light to camera]

Recommended Tools and Hardware (not included):

- Phillips torque driver
- M3 X L screws [mount camera to bracket; where L = mounting surface thickness + 6]

Installation Note: The Smart Ring Light Mounting Bracket can be used with the R-60 and R-70 series Smart Ring Lights. The R-60 series Ring Light will utilize the inner holes of the pronged half of the bracket, and the R-70 series will utilize the outer holes. The R-100 series Ring Lights are not compatible with this bracket.

Bracket Assembly with 60 Series Smart Ring Light

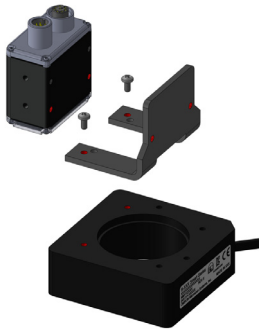

Bracket Assembly with 70 Series Smart Ring Light

QX / Vision HAWK to V/F4XX-F Adapter Plate
V430-AM7

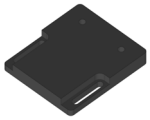

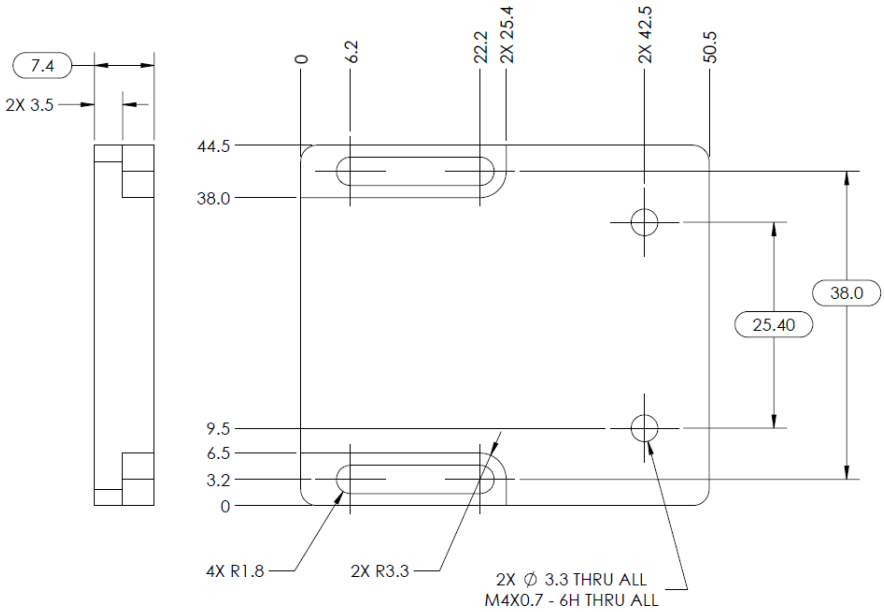

Kit Contents:

- Adapter Plate, Nylon (1)
- M3 X 8mm SS Phillips screws (2)
- M3 X 8mm Nylon Phillips screws (2)
- M4 X 10mm SS Phillips screws (2)
- M4 X 16mm Nylon Phillips screws (2)
- Nylon Washer, size: M4, 1.5mm thickness (4)
- Nylon Washer, size: M4, 3.2mm thickness (4)

Recommended Tools and Hardware (not included):

- Phillips torque driver

Installation Notes: For F430 cameras, the M4 screws and washers are not necessary to use. Use only the M3-sized hardware.

Optics Information

General notes: See optics and lighting accessory guide for detailed installation instructions.

Optics maintenance:

Wipe optics options with a lens cleaning cloth or an airbrush. A cloth dampened with water can be used to remove more stubborn contaminants.

ESD Safe Window - Wiping the ESD window with a lens cleaning cloth has been shown to not impact the surface resistance when wiped up to 500 times (1 wipe = 1 back and forth wipe across the window).

Never use paint thinners or other organic solvents to clean the surfaces of the products.

Front Window Installation Kit
V430-AF10 ✻

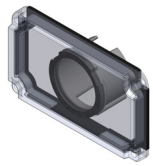

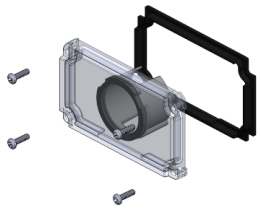

Purpose: Replaces the standard front window of V430 camera models in case of damage.

Kit Contents:

- Window (1)
- Window gasket (1)
- 0-80 Phillips head screws (4)

Recommended Tools (not included):

- Phillips torque driver

Installation Note: Apply a torque of 1.0 in./lbs. (0.11 nm max.) to the screws during installation to maintain gasket function and reduce risk of damaging the window.

Diffuser Installation Kit
V430-AF11 ✻

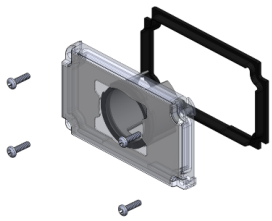

Purpose: To create contrast between specular and non-specular surfaces. Diffusion can be useful when imaging textured codes on mirror like surfaces or reflective DPM marks on textured surfaces.

Kit Contents:

- Diffuser Window (1)
- Window gasket (1)
- 0-80 Phillips head screws (4)

Recommended Tools (not included):

- Phillips torque driver

Installation Note: Apply a torque of 1.0 in./lbs. (0.11 nm max.) to the screws during installation to maintain gasket function and reduce risk of damaging the window.

Polarizer Installation Kit
V430-AF12 ✻

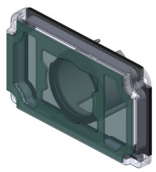

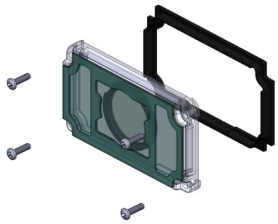

Purpose: To reduce glare when imaging specular surfaces. Cross Polarization can be useful when imaging codes on glossy surfaces or DPM marks on polished metal substrates.

Kit Contents:

- Polarizer Window (1)
- Window gasket (1)
- 0-80 Phillips head screws (4)

Recommended Tools (not included):

- Phillips torque driver

Installation Note: Apply a torque of 1.0 in./lbs. (0.11 nm max.) to the screws during installation to maintain gasket function and reduce risk of damaging the window.

Right Angle Mirror Installation Kit
V430-AF3

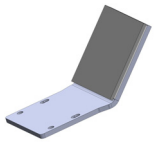

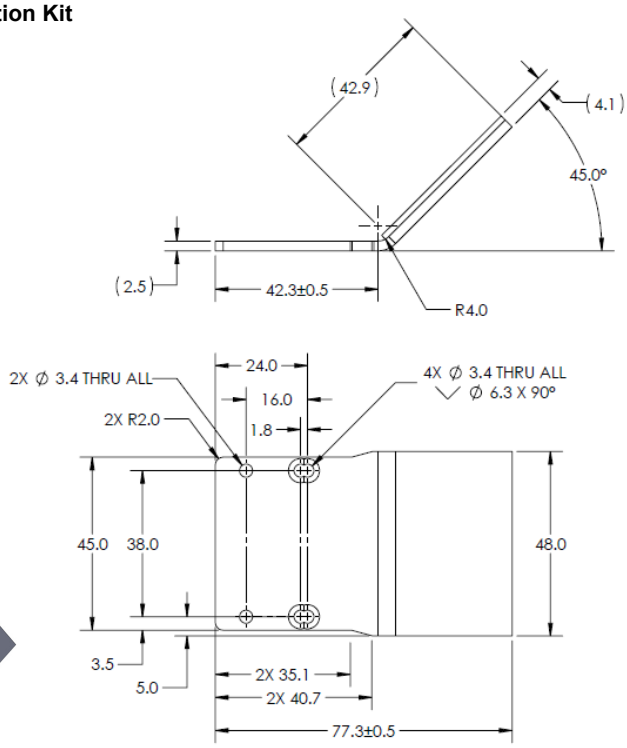

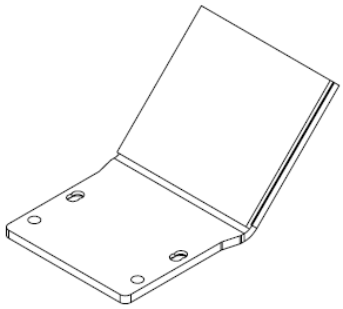

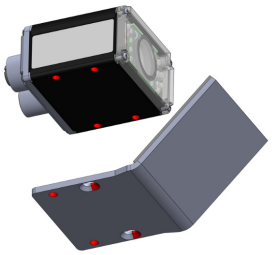

Purpose: Redirects the imaging path of the camera by 90 degrees.

Kit Contents:

- Right angle mirror bracket, Aluminum [bracket] and glass [mirror] (1)

Recommended Tools and Fasteners (not included):

- M3 X L screws (2) [where L = mounting surface thickness + 2.5]
- M3 x 6 Flat head screws (2)
- Phillips torque driver

Installation Note: Apply a torque of 4.4 - 8.8 in. lbs. (0.5 - 1.0 NM) to the screws during installation.

YAG Laser Filter Window
V430-AF4

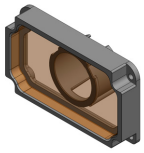

Window Material
Polymer

Laser Type
Argon
Broadband
KTP
Nd:YAG

Protection
OD 6+ @ 200-532 nm
OD 4+ @ 850-879 nm
OD 5+ @ 900-1070 nm

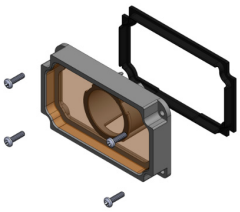

Purpose: The V430-AF4 YAG Laser Filter is used to block a range of wavelengths from a variety of laser types from being seen by the MicroHAWK camera that will either disrupt the cameras view of the object, or damage the MicroHAWK sensor.

The table shows the laser types that are handled by the V430-AF4 Filter window, as well as the level of protection they provide at the various wavelengths.

Note: Optical Density (OD) is a measure of the attenuation of energy passing through a filter. The higher the OD value, the higher the attenuation and the greater the protection level.

OD 4 blocks 99.99% of the laser energy.

OD 5 blocks 99.999% of the laser energy (YAG).

OD 6 blocks 99.9999% of the laser energy (Argon, KTP)

Kit Contents:

- YAG filter (1)
- Window gasket (1)
- 0-80 Phillips head screws (4)

Recommended Tools and Fasteners (not included):

- Phillips torque driver

Installation Note: Apply a torque of 1.0 in/lbs. (0.11 nm max.) to the screws during installation to maintain gasket function and reduce risk of damaging the window.

ESD-Safe Window
V430-AF5

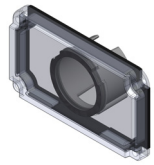

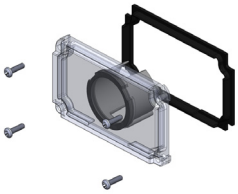

Purpose: An ESD event occurs when an electrostatic charge rapidly transfers between two objects. This transfer is usually caused when two objects with a notable potential difference in electrical charge contact each other. However, ESD events can also happen when two objects close to one another create a highly charged electrostatic field.

ESD safety precautions are extremely important in the electronics and semiconductor industries where sensitive components can be damaged even by a discharge of a mere 20 volts. Less sensitive components may still be susceptible, and cumulative discharges can create long-term problems affecting the functionality and performance of electronic components.

The MicroHAWK V430-AF5 ESD-Safe window is designed with an ESD coating on the exterior surface to prevent static discharge between the reader or smart camera when the camera is deployed close to the component surface. The antistatic coating offers a resistivity of ≤ 1.0 X 10^9 Ω/sq to prevent these electrostatic discharges.

Kit Contents:

- ESD Safe Window (1)
- Window gasket (1)
- 0-80 Phillips head screws (4)

Recommended Tools and Fasteners (not included):

- Phillips torque driver

Installation Note: Apply a torque of 1.0 in/lbs. (0.11 nm max.) to the screws during installation to maintain gasket function and reduce risk of damaging the window.

Red Filter and Blue Filter Installation Kits

Red Filter Installation Kit
V430-AF6

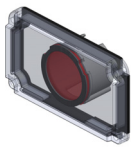

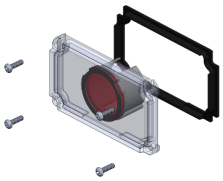

Blue Filter Installation Kit
V430-AF7

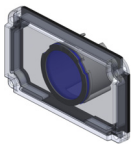

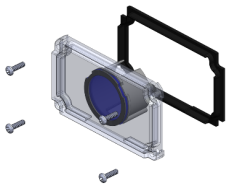

Purpose: The Red Filter (V430-AF6), and Blue Filter (V430-AF7) are used to turn MicroHAWKs equipped with white lights into units that emit red or blue light. The filters limit passage of wavelengths -- other than red when using the red filter, or other than blue when using the blue filter -- to the sensor and reduce the response of an opposing color.

Kit Contents:

- Filter Window (1) [red or blue]
- Window Gasket (1)
- 0-80 Phillips head screws (4)

Recommended Tools (not included):

- Phillips torque driver

Installation Note: Apply a torque of 1.0 in/lbs. (0.11 nm max.) to the screws during installation to maintain gasket function and reduce risk of damaging the window.

Ring Light Front Installation Kit
V430-AF0R

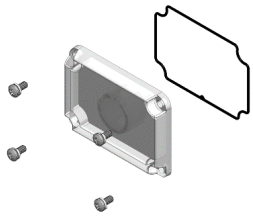

Purpose: To replace the front window should it become scratched or damaged. For use on units equipped with the ring light only.

Kit Contents:
- Ring Light Window (1)
- Window gasket (1)
- #4-40 Phillips head screws with split lock washer (4)

Recommended Tools:
- Phillips torque driver

Installation Notes: Apply a torque of 2.9 in. lbs. (0.33 Nm max) to the screws during installation to maintain gasket function and reduce risk of damaging the window.

Ring Light Diffuser Installation Kit
V430-AF1R

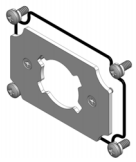

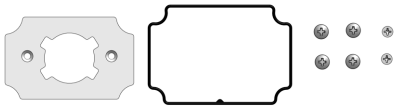

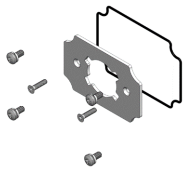

Purpose: To create contrast between specular and non-specular surfaces. Diffusion can be useful when imaging textured codes on mirror like surfaces or reflective DPM marks on textured surfaces. For use on units equipped with the ring light only.

Kit Contents:
- Ring Light Diffuser (1)
- Window gasket (1)
- #4-40 Phillips head screws with split lock washer (4)
- #2-56 Phillips head screws (2)

Recommended Tools:
- Phillips torque driver

Installation Notes: Apply a torque of 2.9 in. lbs. (0.33 Nm max) to the #4-40 screws during installation to maintain gasket function and reduce risk of damaging the window. Apply a torque of 1.9 in. lbs. (0.21 Nm max) to the #2-56 screws during installation to reduce risk of damaging the diffuser.

Ring Light Polarizer Installation Kit
V430-AF2R

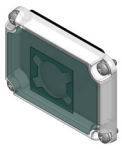

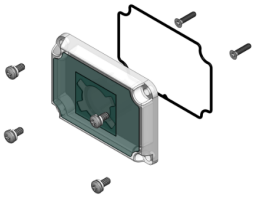

Purpose: To reduce glare when imaging specular surfaces. Cross Polarization can be useful when imaging codes on glossy surfaces or DPM marks on polished metal substrates. For use on units equipped with the ring light only.

Kit Contents:
- Ring Light Window with Polarizer (1)
- Window gasket (1)
- #4-40 Phillips head screws with split lock washer (4)
- #2-56 Phillips head screws (2)

Recommended Tools:
- Phillips torque driver

Installation Notes: Apply a torque of 2.9 in. lbs. (0.33 Nm max) to the #4-40 screws during installation to maintain gasket function and reduce risk of damaging the window. Apply a torque of 1.9 in. lbs. (0.21 Nm max) to the #2-56 screws during installation.

Lighting Information

General Notes: See optics and lighting accessory guide for detailed installation instructions.

Red, White, Blue, and IR Light Installation Kits

Purpose: MicroHAWK light color changes can be accomplished using the F430-F Red, Blue, White, or IR LED kits. Red or blue LED kits replace or change the color of the outer LED boards. Using a specific color can enhance the response of that color or reduce the response of an opposing color. White LED kits replace or provide full spectrum illumination for applications using a chromatic sensor inspecting colors. IR LED kits replace or create contrast on features that have a single hue or to enhance the response of black features and reduce the response of colors.

A typical example of how to use different color filters or LEDs with monochrome cameras is shown below. The emitted color is matched with the color of the part that needs to be emphasized or de-emphasized, which creates sufficient contrast for the part to be inspected or for the symbol to be decoded. In the example below, the red filter makes the reddish copper look bright, while the green circuit board looks dark. The blue filter produces the opposite effect.

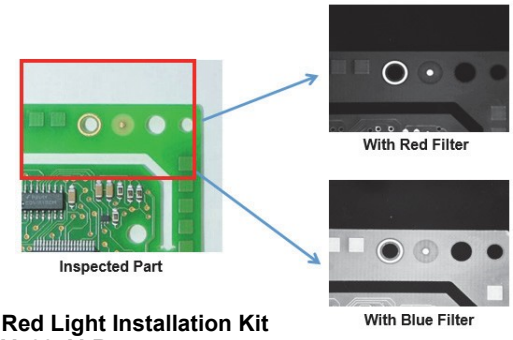

Red Light Installation Kit V430-ALR

White Light Installation Kit V430-ALW

Blue Light Installation Kit V430-ALB

IR Light Installation Kit V430-ALI

High Bright Red Light Installation Kit V430-ALRH

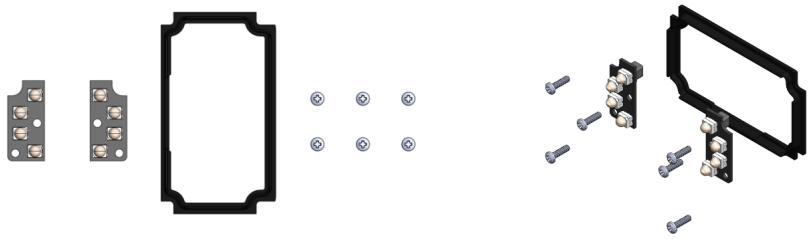

Kit Contents:

- LED Boards Kit (1) [Red, Blue, White or IR]
- Window gasket (1)
- 0-80 Phillips head screws (6)

Recommended Tools:

- Phillips torque driver
- Fine tip tweezers

Installation Notes: Apply a torque of [1.0 in. lbs. (0.11 Nm max.) screws during installation to maintain gasket function and reduce risk. of damaging the product.

Red Ring Light Installation Kit V430-ALRR

White Ring Light Installation Kit V430-ALWR

Blue Ring Light Installation Kit V430-ALBR

IR Ring Light Installation Kit V430-ALIR

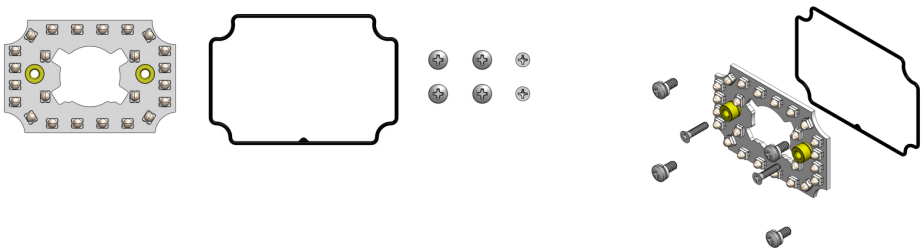

Kit Contents:

- LED Boards Kit (1) [Red, Blue, White or IR]
- Window gasket (1)
- #4-40 Phillips head screws with split lock washer (4)
- #2-56 Phillips head screws (2)

Recommended Tools:

- Phillips torque driver
- Fine tip tweezers

Installation Notes: Apply a torque of 2.9 in. lbs. (0.33 Nm max) to the #4-40 screws during installation to maintain gasket function and reduce risk of damaging the window. Apply a torque of 1.9 in. lbs. (0.21 Nm max) to the #2-56 screws during installation to reduce risk of damaging the diffuser. For use on units equipped with the ring light only.

Wiring Options

QX-1 Interconnect Module – Power, Trigger, Smart Light Control Breakout
98-000103-02

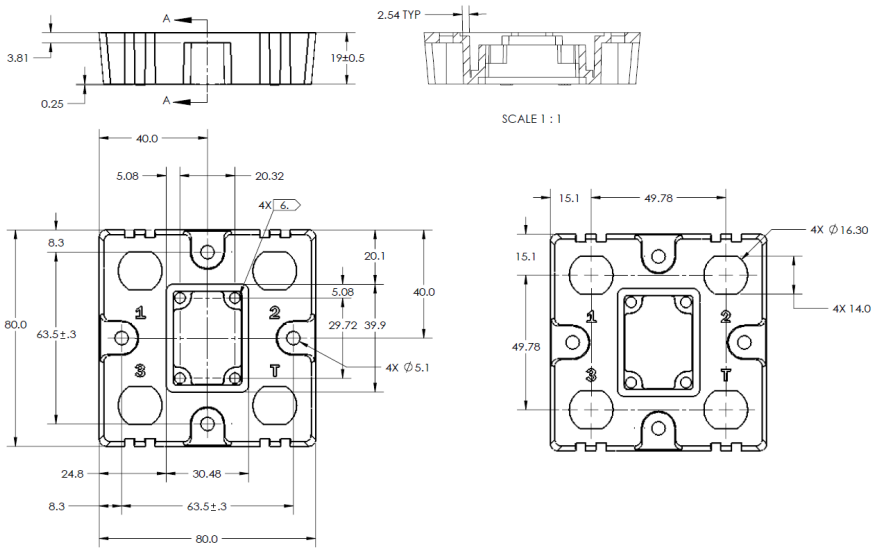

QX-1 Photo Sensor, M12 4-Pin Plug, NPN – 2 Meters – Light ON / Dark ON
99-9000016-01

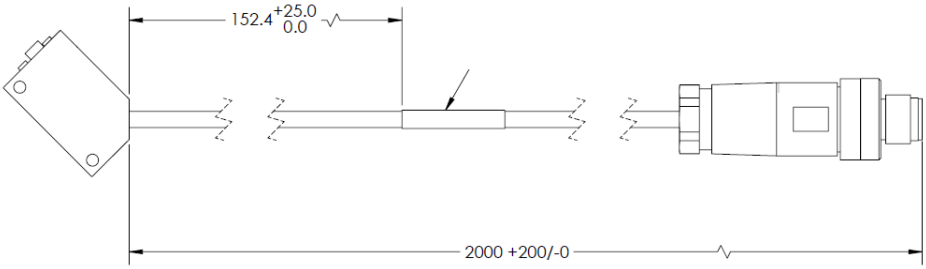

QX-1 Field-Wireable M12 4-Pin Plug for Any Trigger Source or Photo Sensor – Screw Terminals
98-9000239-01

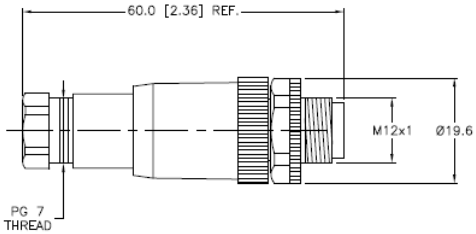

Power Supply, 100-240VAC, +24VDC, M12 12-Pin Socket – 1 Meter – U.S. / Euro Plug
97-000012-01

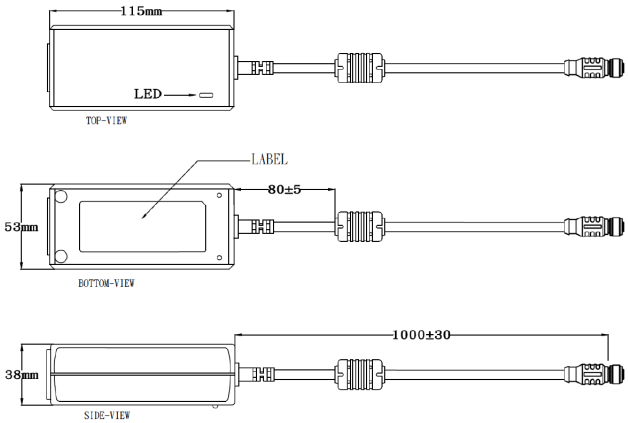

Omron Microscan Smart Light Series – Integrated Power and Strobe Control Module
See Omron Microscan Smart Light Offering – Ring, DOAL, Large Area Lighting

R-60

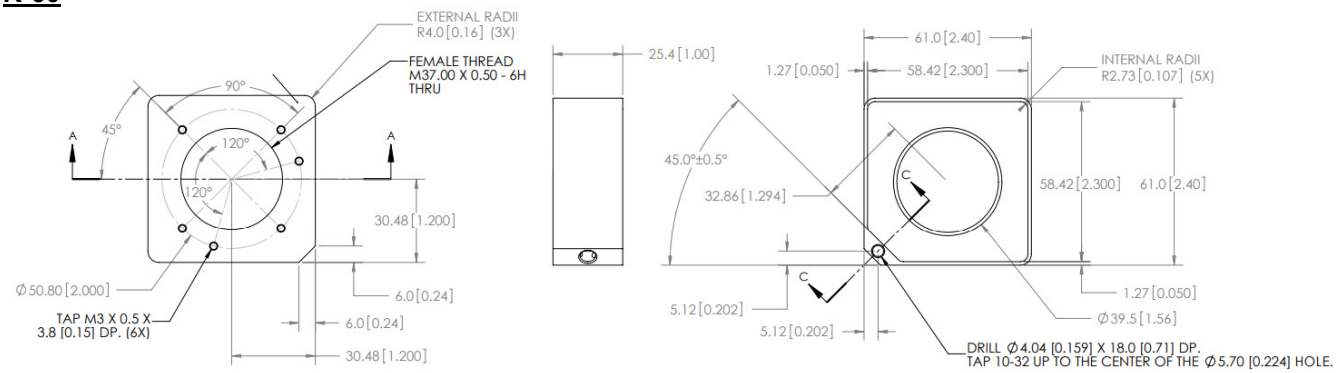

R-70

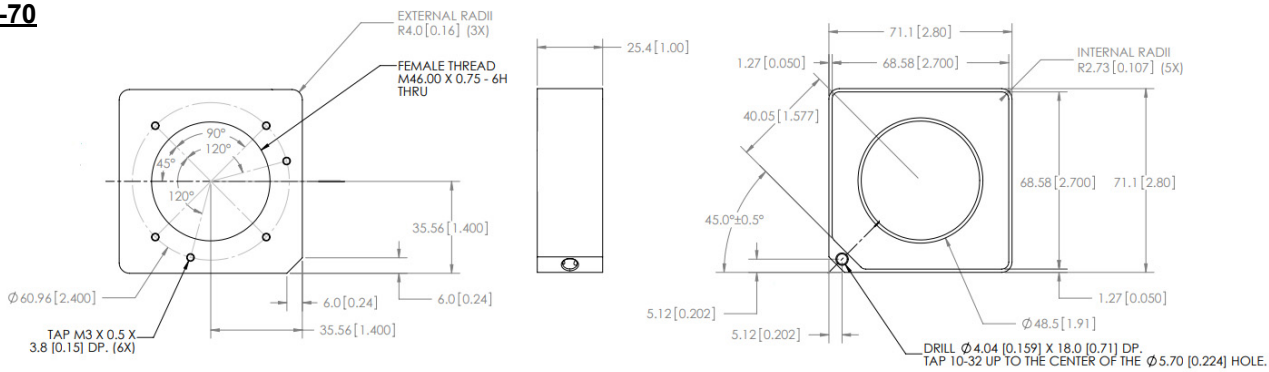

Ethernet Communication Cables – Right Angle M12 Connectors – 3 Meters
M12 Plug on Camera to RJ45 Connector
V430-WELU-3M (Right Angle Up)*
V430-WELD-3M (Right Angle Down)*

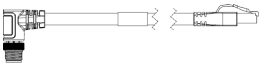

*Right angle up

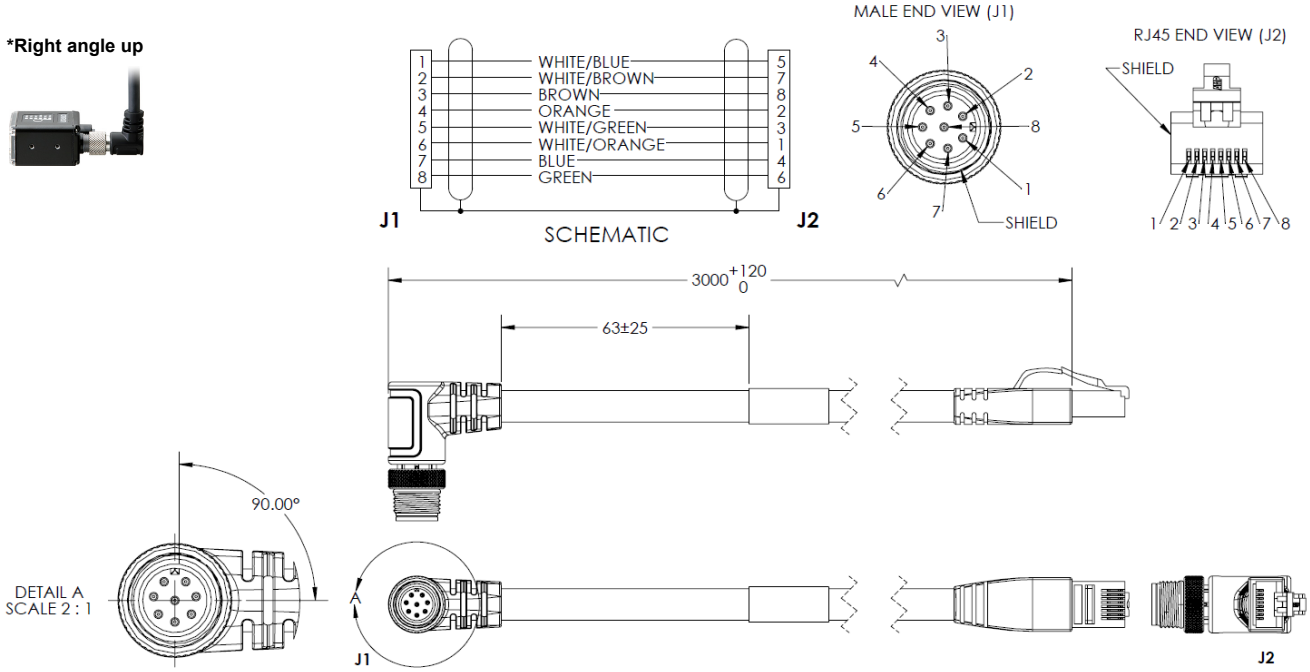

*Right angle down

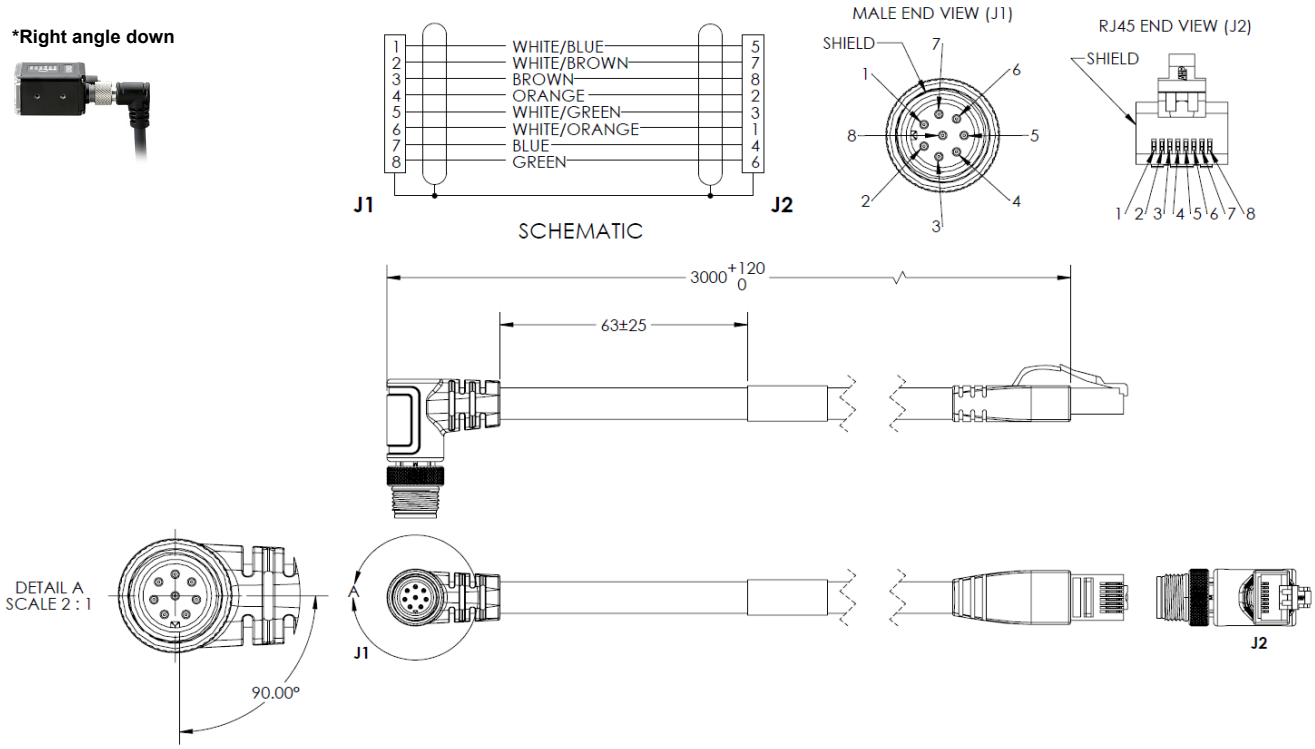

Camera to QX-1 Interconnect Cables – 1 Meter, 3 Meters, or 5 Meters
M12 Socket to M12 Plug
QX-1 is used as breakout module for common IO signals and power.
V430-WQ-1M
V430-WQ-3M
V430-WQ-5M

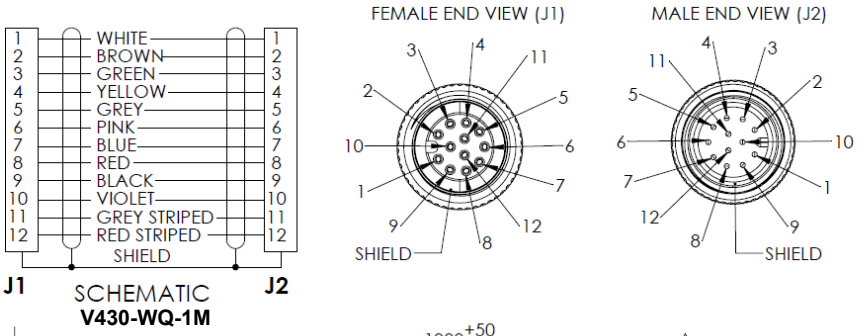

SCHEMATIC
V430-WQ-1M

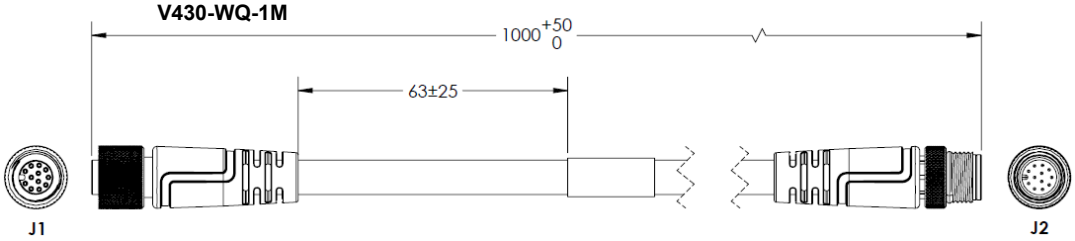

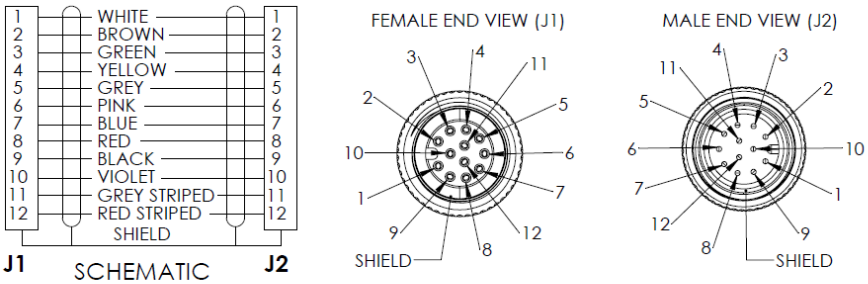

SCHEMATIC
V430-WQ-3M

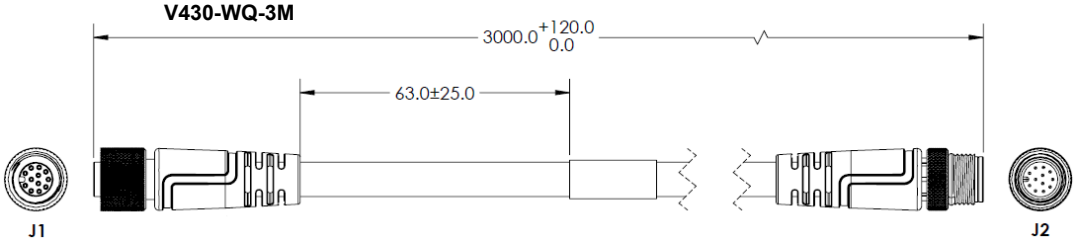

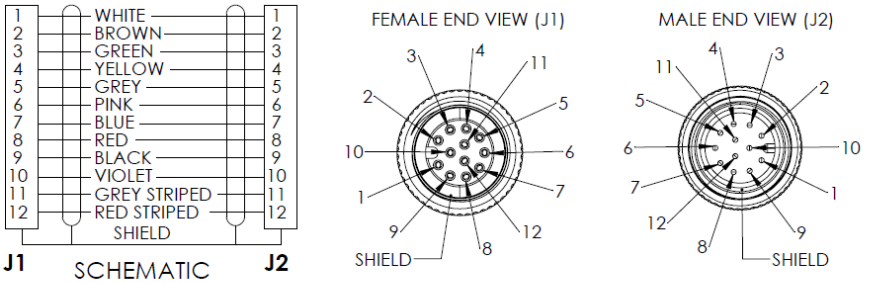

SCHEMATIC
V430-WQ-5M

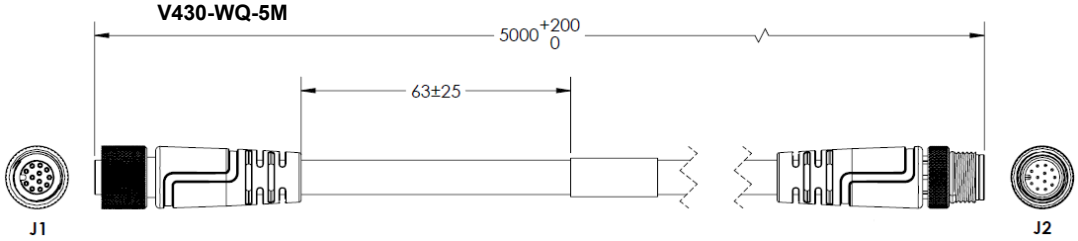

M12 Socket to M12 Plug, with Power Filter – 300 mm
V430-WQF-1M

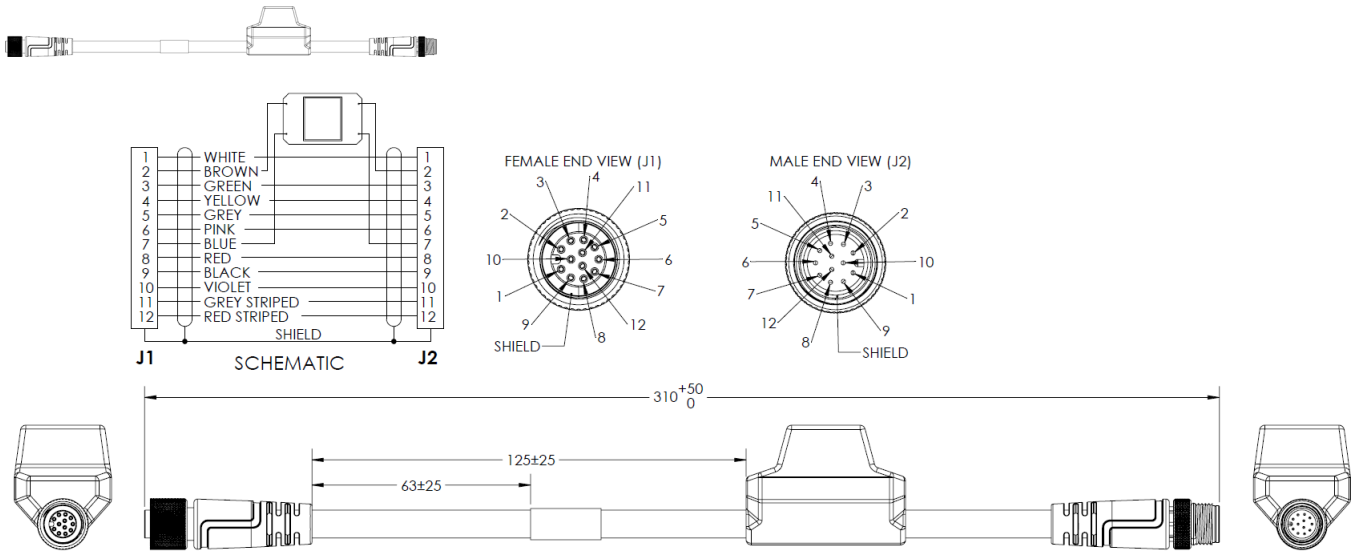

QX-1 M12 to Smart Light Power and Strobe Control Cables – 3 Meters
M12 Plug on QX-1 to 5 Pin Socket on Light
61-000204-01 (Continuous Power)
61-000218-01 (Strobe Control)

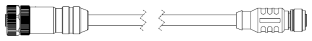

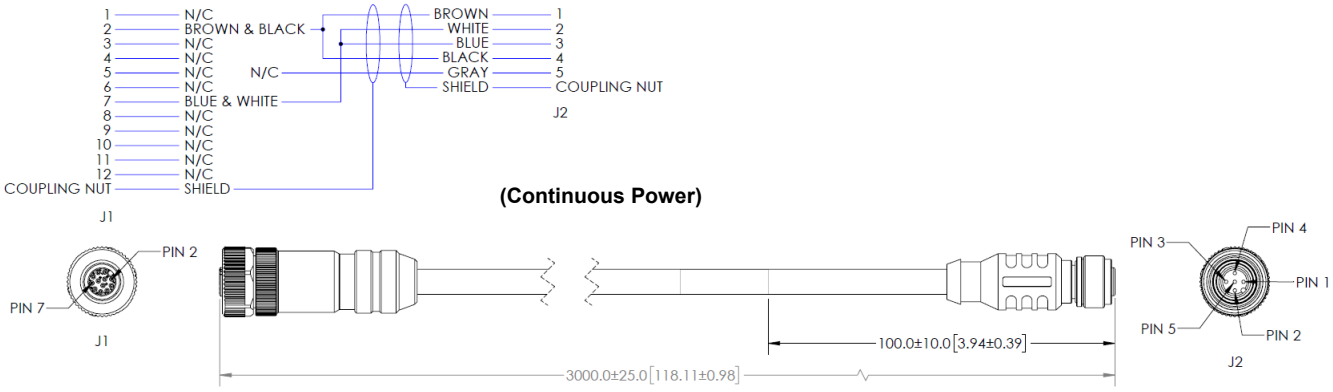

(Continuous Power)

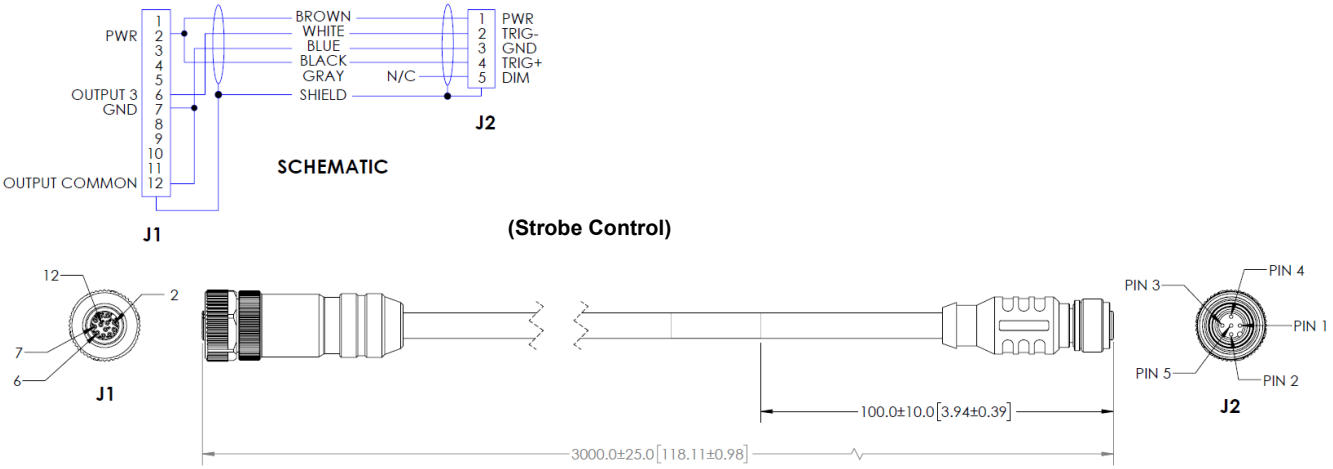

(Strobe Control)

Y Cable, Camera/Power and Smart Light Power (Continuous On) – 1 Meter
61-9000135-01

Y Cable, Camera/Power and Smart Light Strobe Control – 1 Meter
61-9000137-01

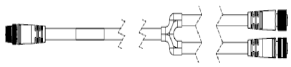

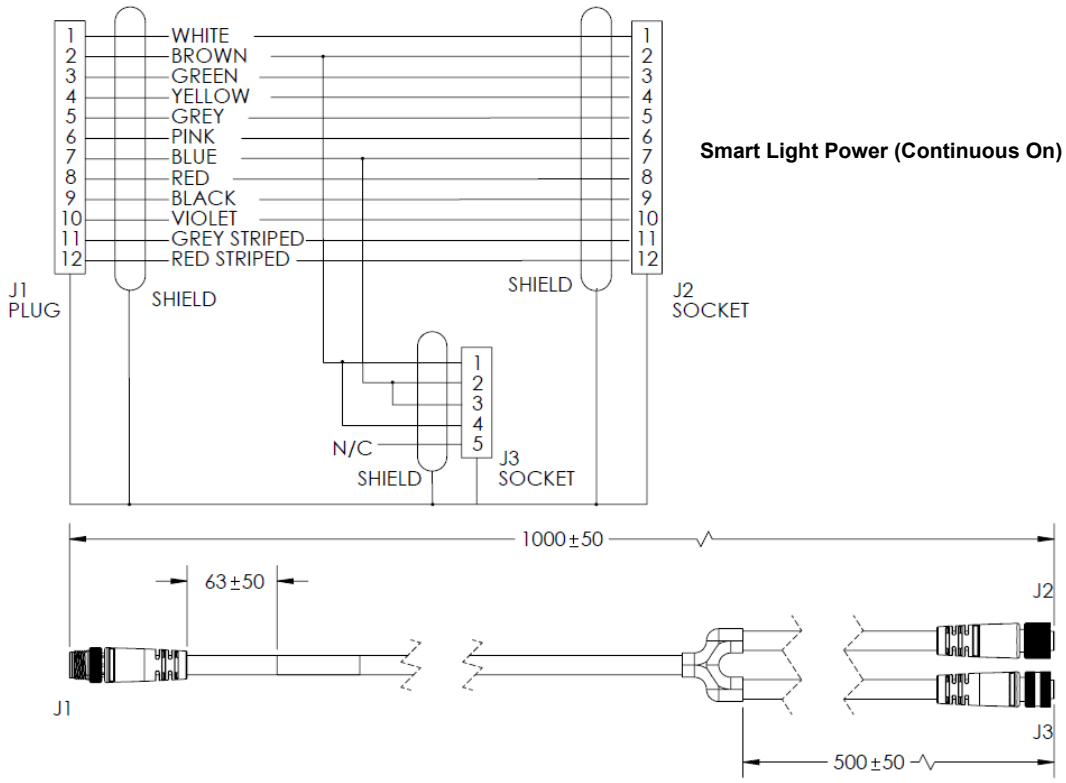

Smart Light Power (Continuous On)

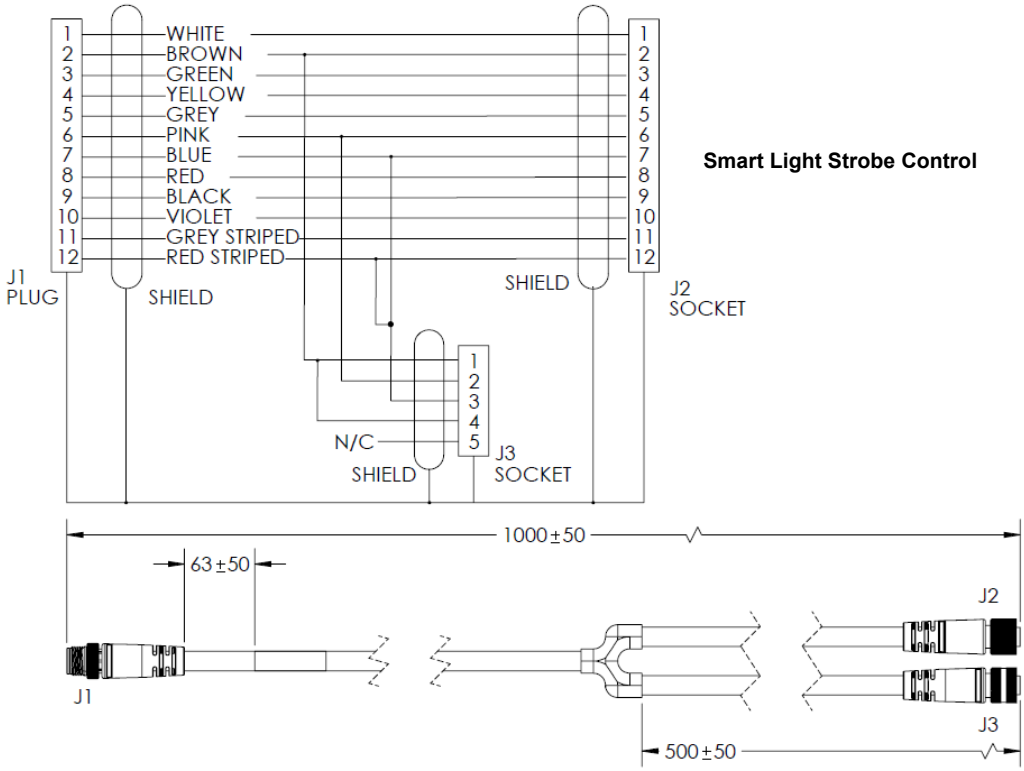

Smart Light Strobe Control

M12 to Flying Leads Cable, with Power Filter – 3 Meters or 5 Meters
V430-W8F-3M
V430-W8F-5M

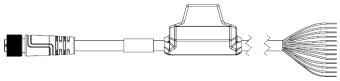

V430-W8F-3M

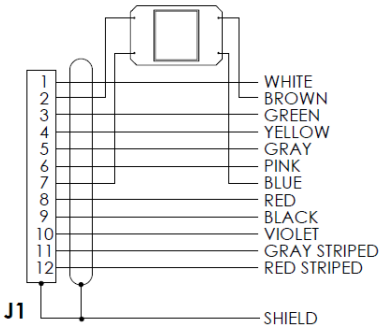

SCHEMATIC

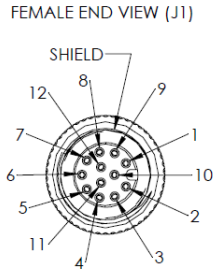

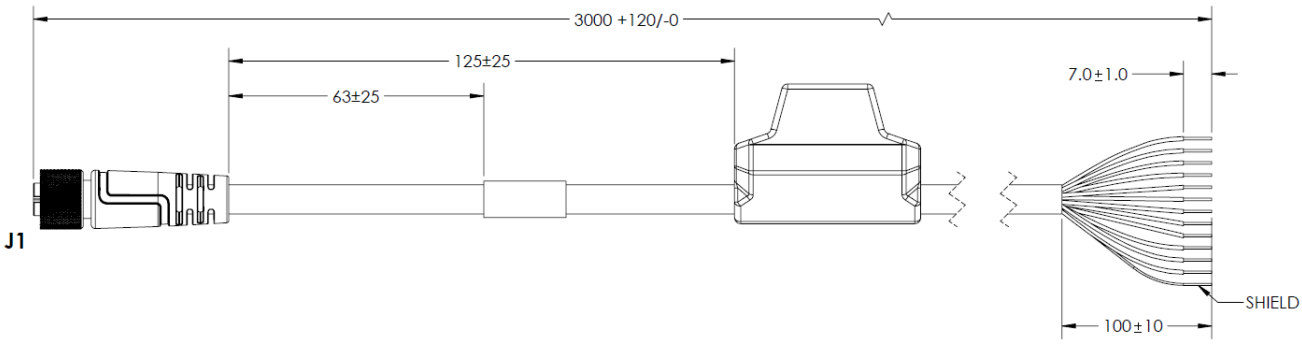

V430-W8F-5M

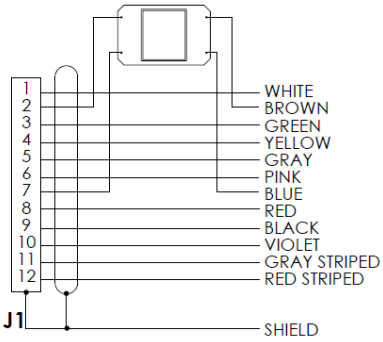

SCHEMATIC

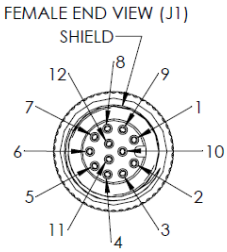

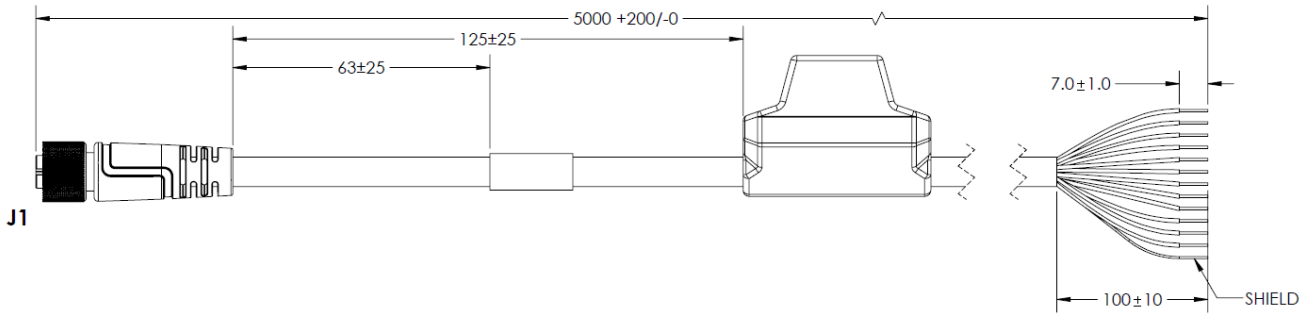

M12 to Flying Leads Cable Right Angle Up Power, IO, RS232, USB – 3 Meters
V430-W8LU-3M

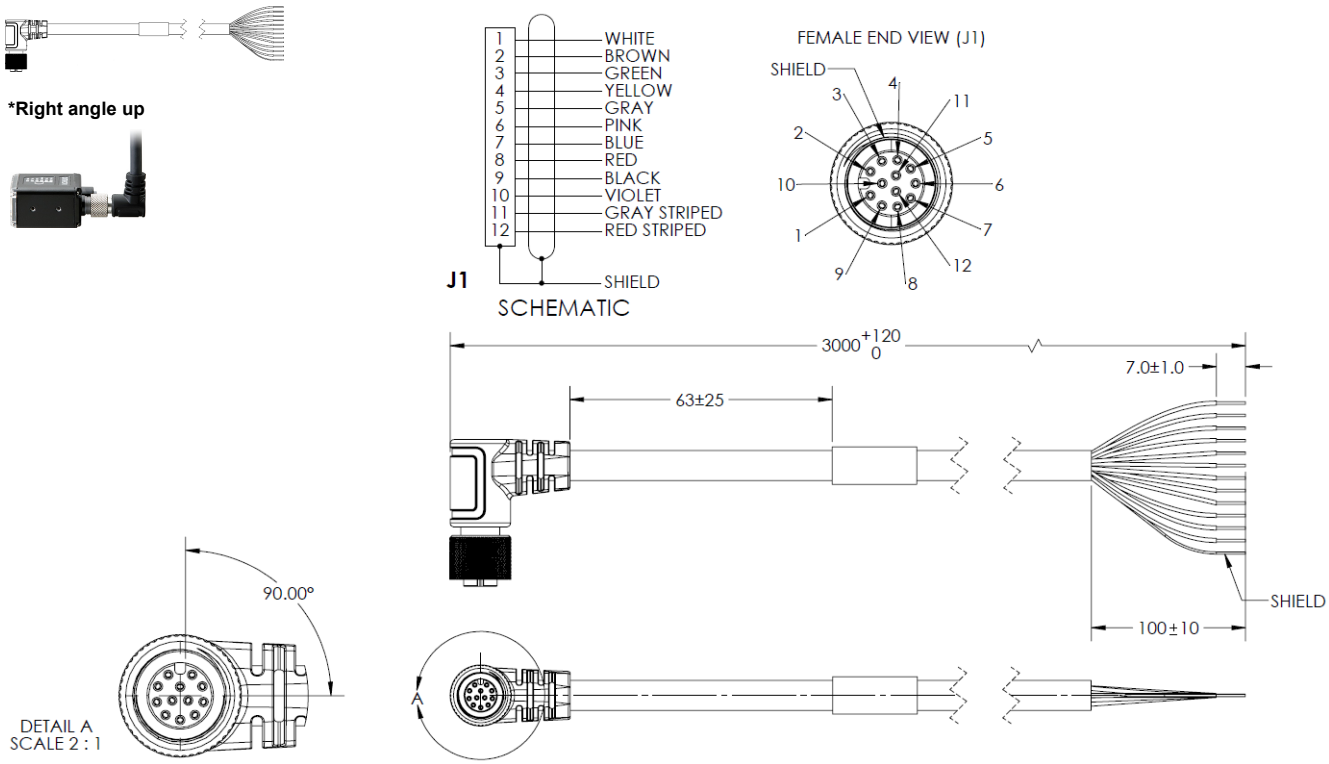

M12 to Flying Leads Cable Right Angle Up, with Power Filter – 3 Meters
V430-W8LUF-3M

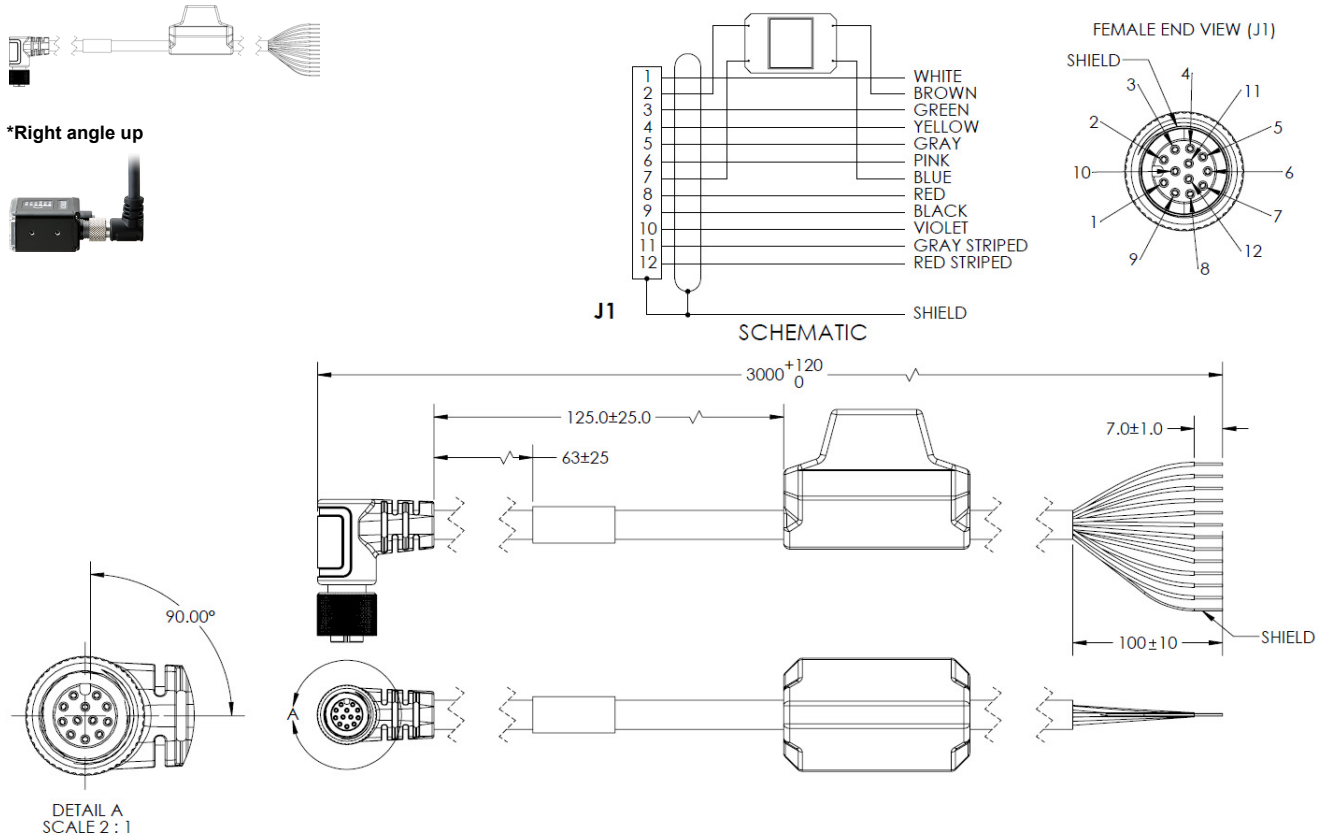

M12 to Flying Leads Cable Right Angle Down Power, IO, RS232, USB – 3 Meters
V430-W8LD-3M

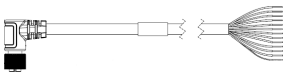

*Right angle down

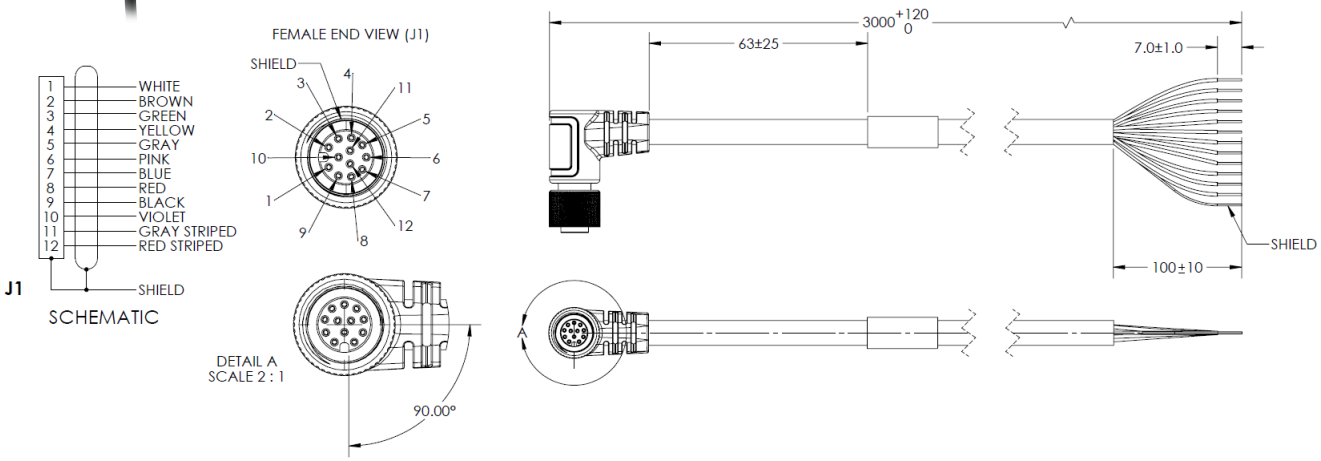

M12 to Flying Leads Cable Right Angle Down, with Power Filter – 3 Meters
V430-W8LDF-3M

*Right angle down

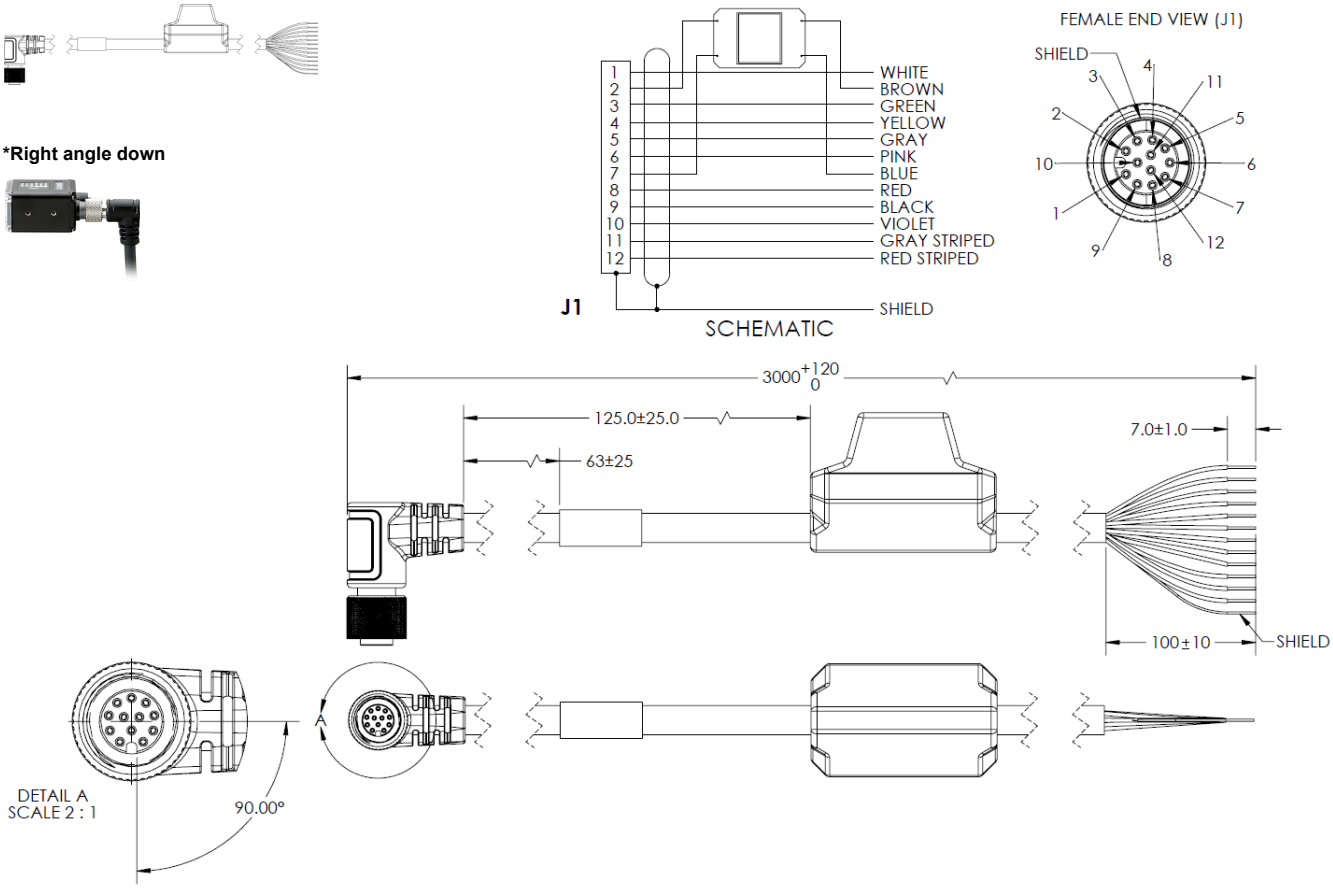

M12 to RS-232 Breakout – 1 Meter or 3 Meters
V430-WR-1M
V430-WR-3M

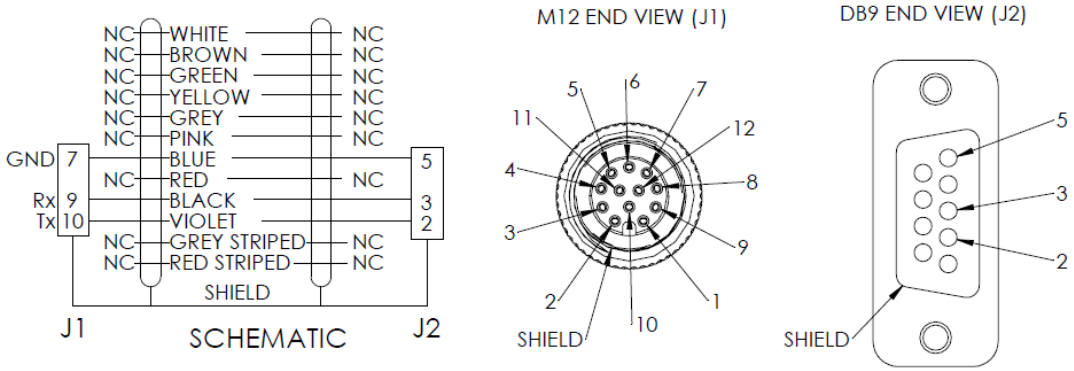

V430-WR-1M

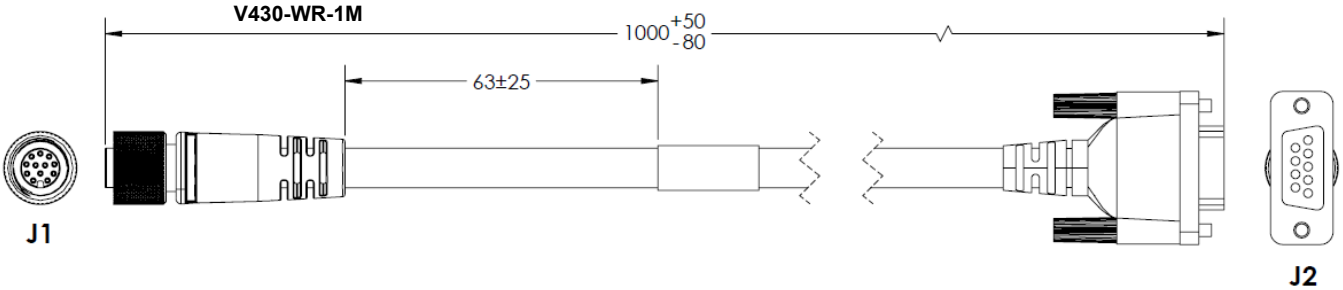

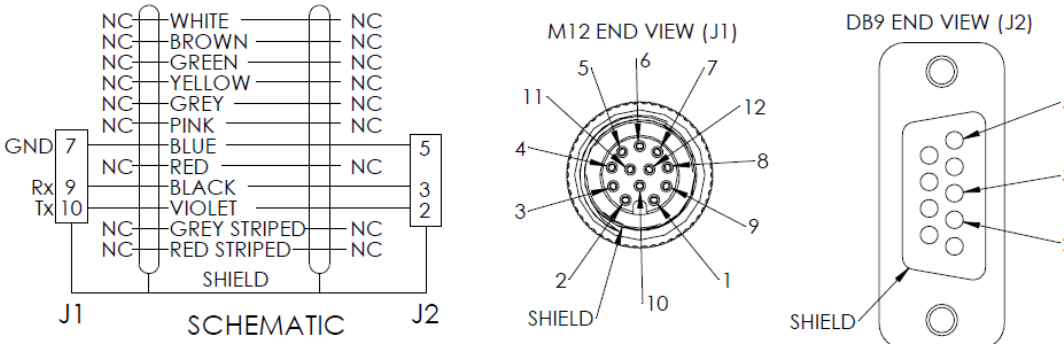

V430-WR-3M

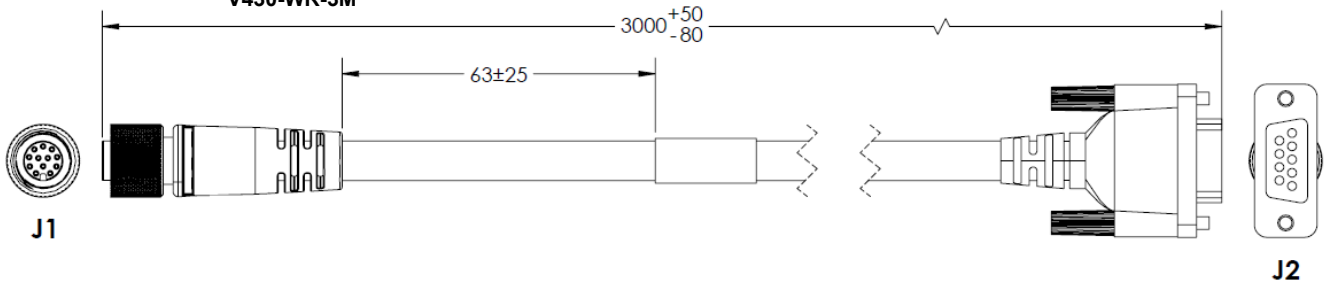

Camera to QX-1 Interconnect Cables with RS-232 Breakout – 2.7 Meters
V430-WQR-3M

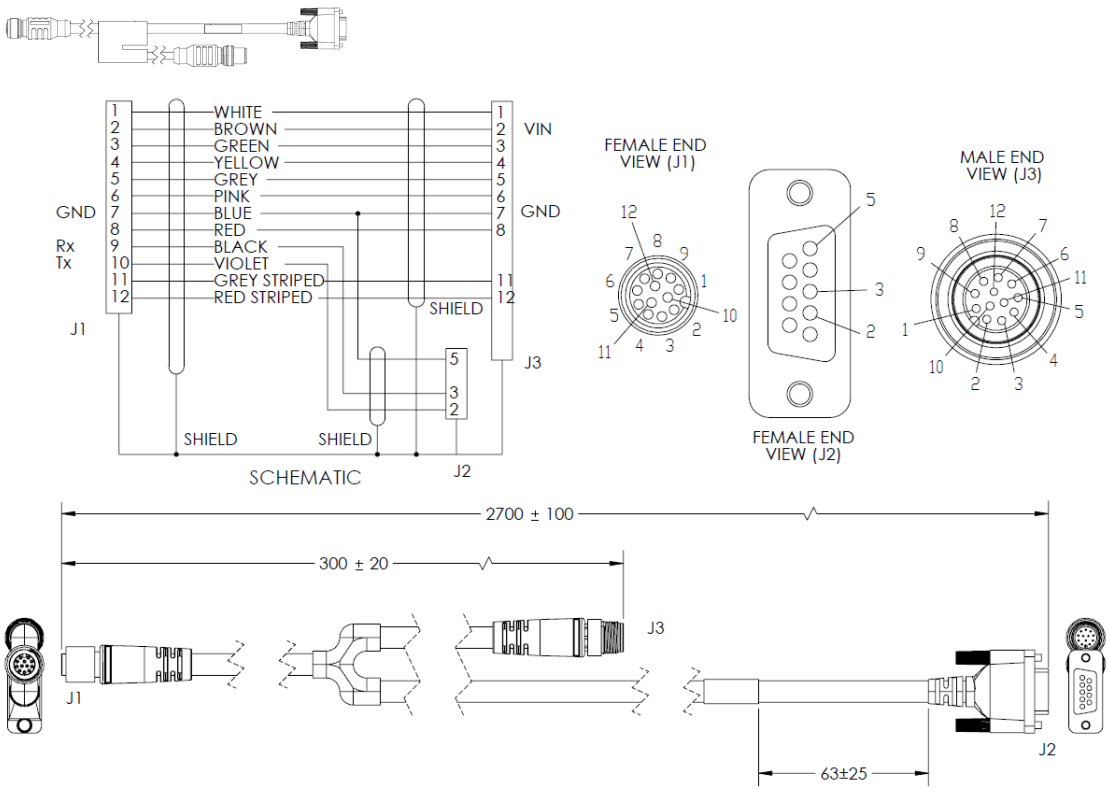

Camera to QX-1 Interconnect Cables with USB Keyboard Wedge Breakout – 2.7 Meters
V430-WQK-3M

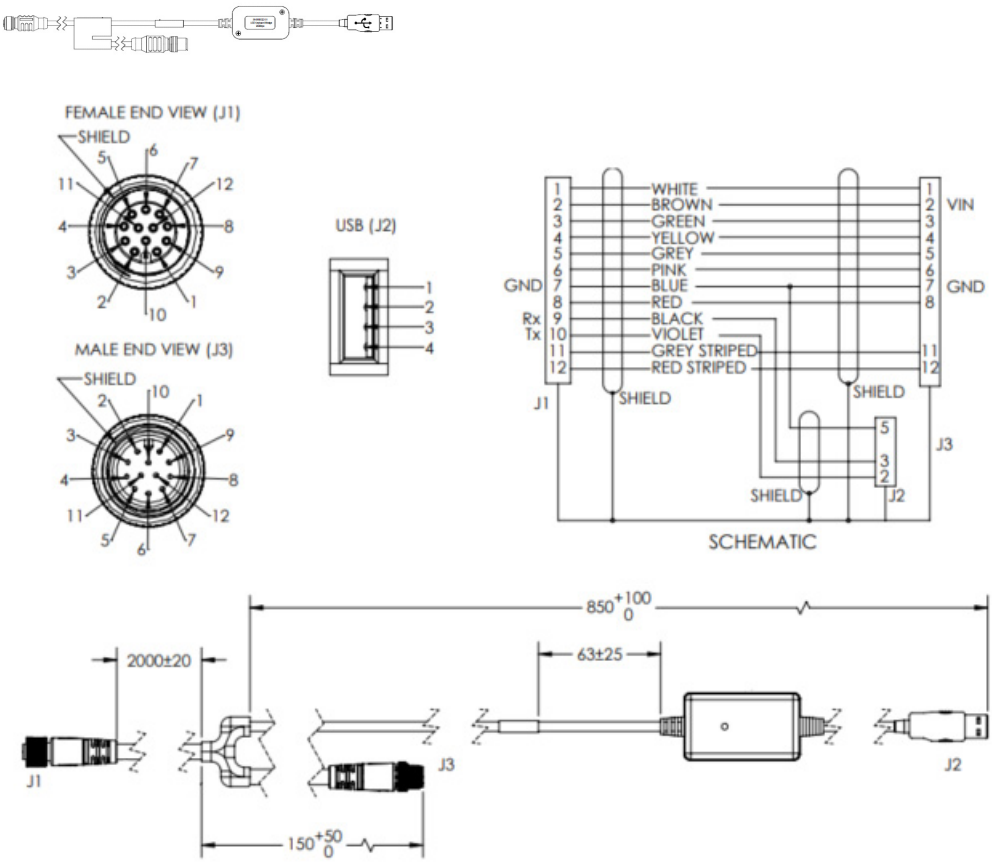

M12 12-Pin Plug to M12 12-Pin Socket, Right Angle, 3 Meters
61-000148-03

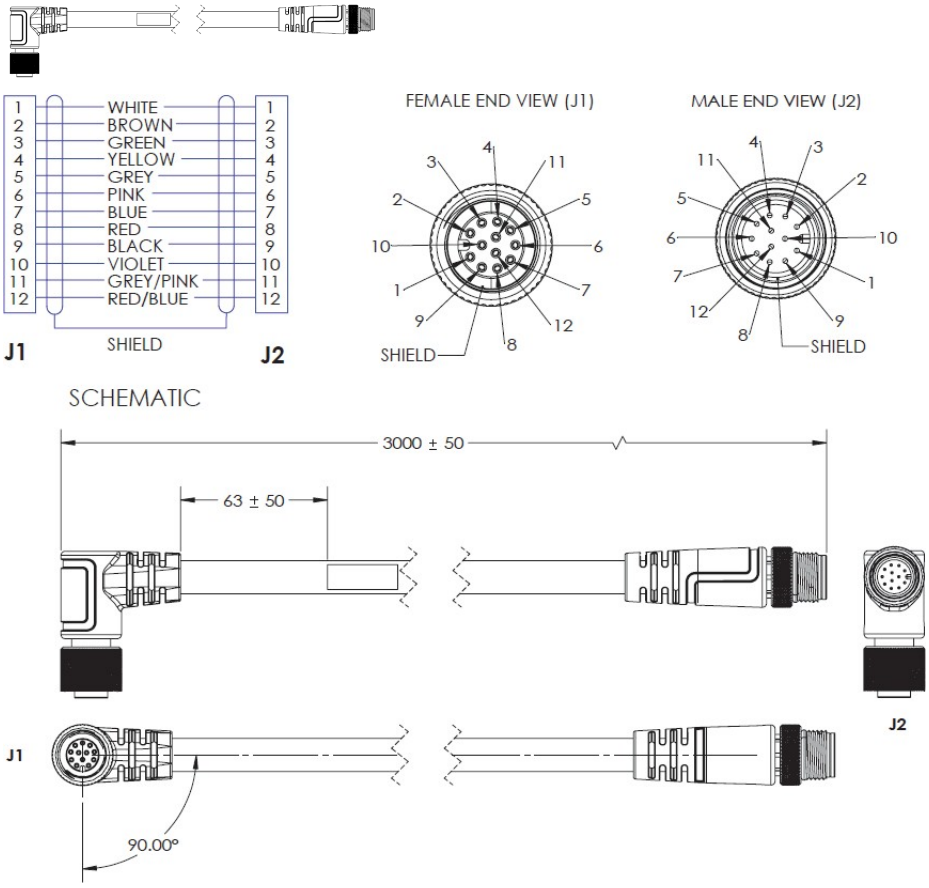

M12 12-Pin Plug to M12 12-Pin Socket, Right Angle, Alternate Key, 3 Meters
61-000148-04

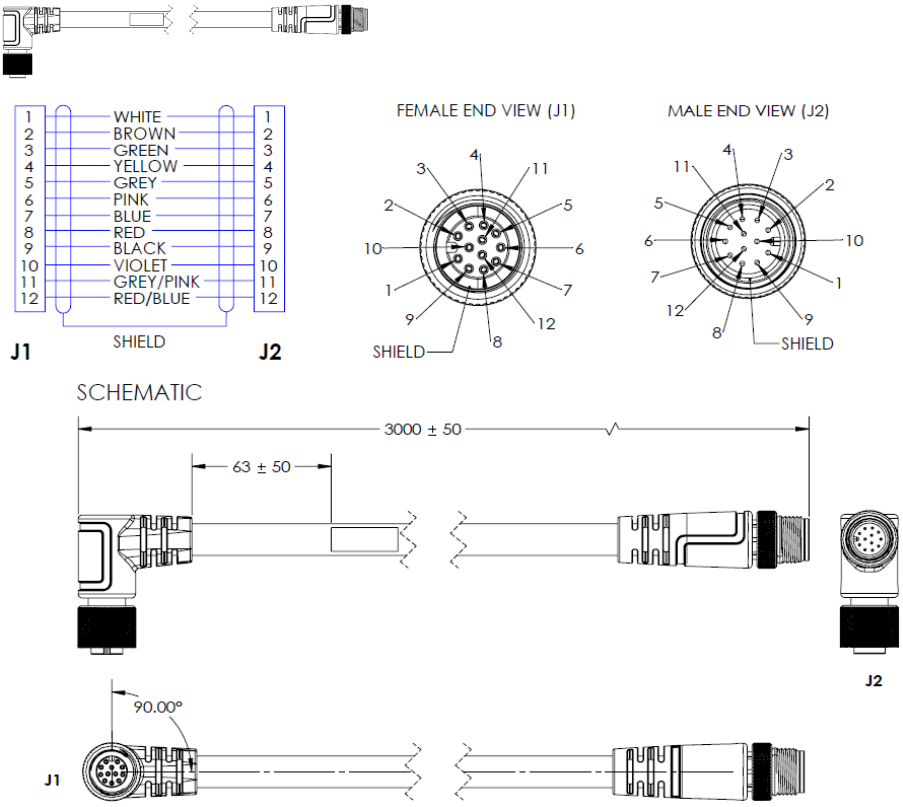

M12 12-Pin Plug to M12 12-Pin Socket, Right Angle, Alternate Key, 1 Meter
61-000162-04

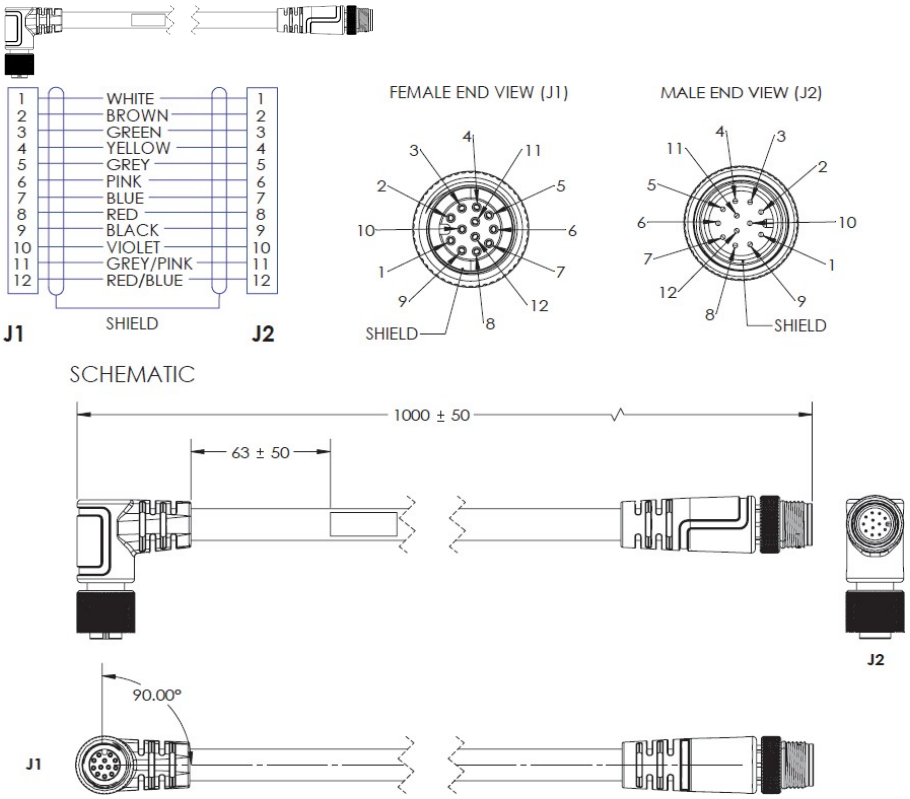

M12 12-Pin Plug to M12 12-Pin Socket, Right Angle, 1 Meter
61-000162-03

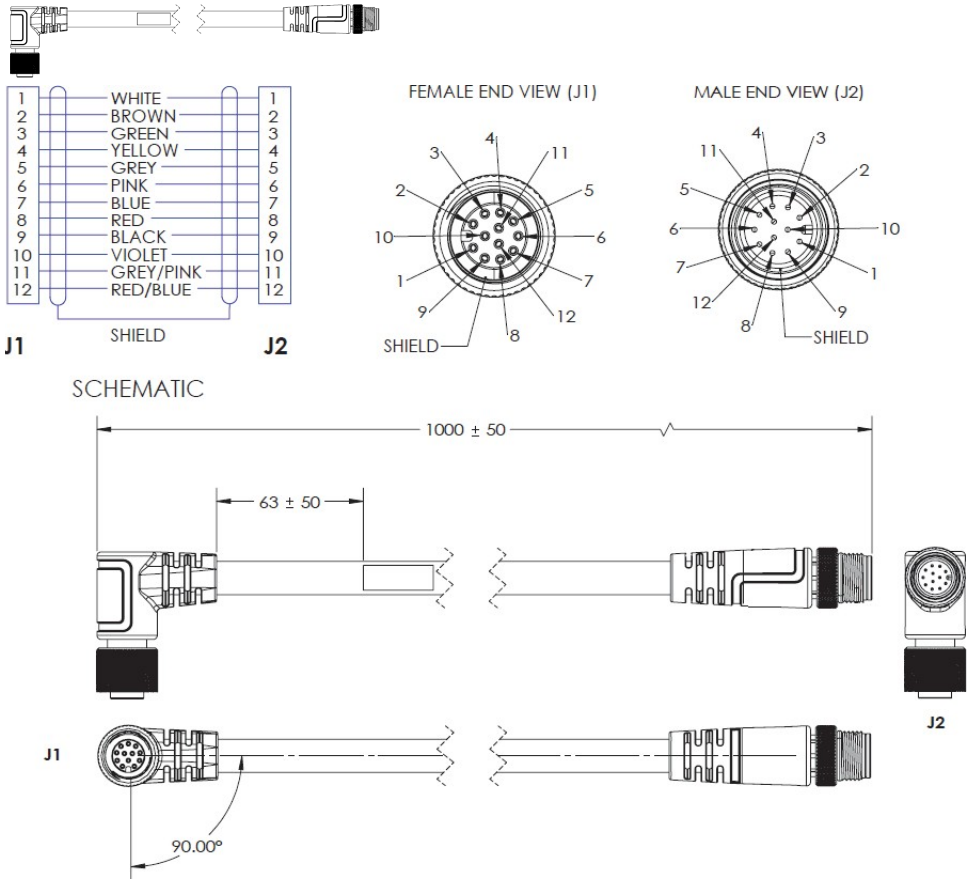

Cable, Adapter, Omron PLC – 2 Meters
V430-WPLC-2M

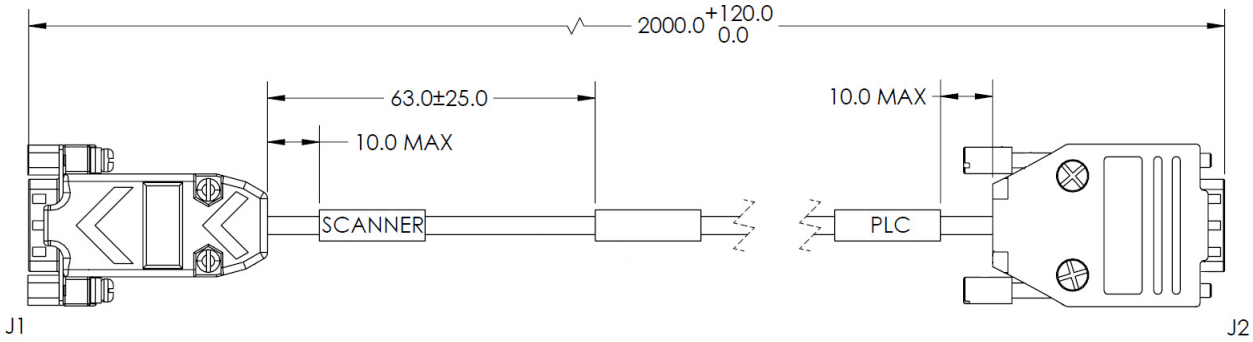

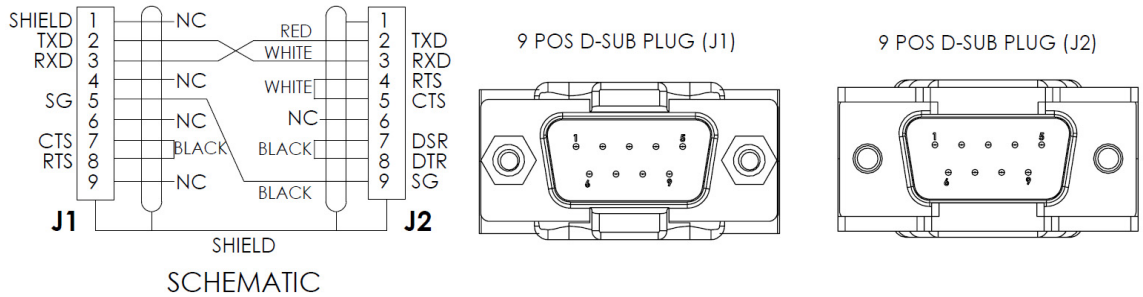

AutoVISION Verification Calibration Card with NIST-Traceable Measurement Report
98-000265-01
98-000265-02

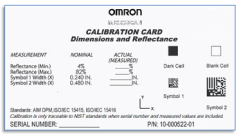

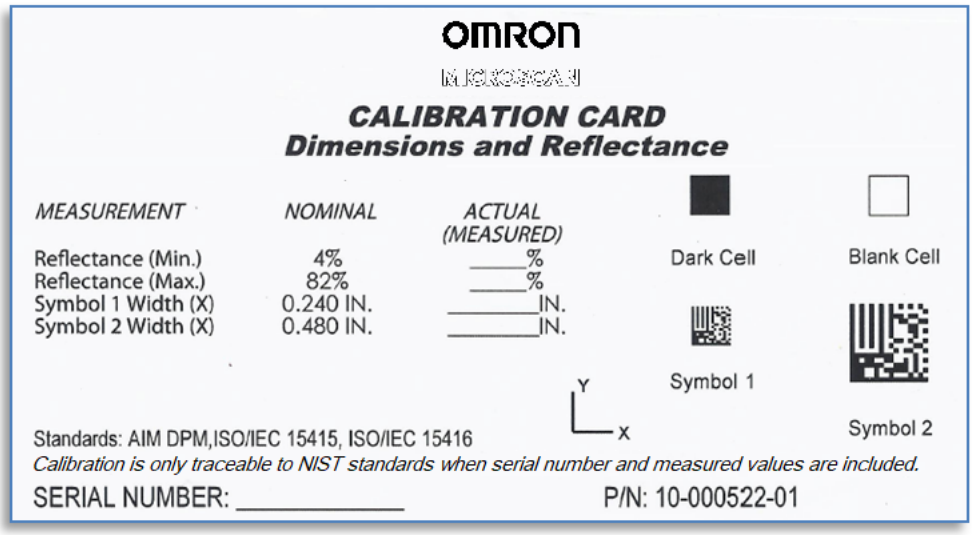

Related Manuals

Manual Number	Model	Manual
Z433 (84-9000402-02)	F320-F, F330-F, F420-F, F430-F	MicroHAWK F320-F / F330-F / F420-F / F430-F User Manual

Terms and Conditions Agreement

Read and understand this catalog.

Please read and understand this catalog before purchasing the products. Please consult your OMRON representative if you have any questions or comments.

Warranties.

(a) Exclusive Warranty. Omron's exclusive warranty is that the Products will be free from defects in materials and workmanship for a period of twelve months from the date of sale by Omron (or such other period expressed in writing by Omron). Omron disclaims all other warranties, express or implied.

(b) Limitations. OMRON MAKES NO WARRANTY OR REPRESENTATION, EXPRESS OR IMPLIED, ABOUT NON-INFRINGEMENT, MERCHANTABILITY OR FITNESS FOR A PARTICULAR PURPOSE OF THE PRODUCTS. BUYER ACKNOWLEDGES THAT IT ALONE HAS DETERMINED THAT THE PRODUCTS WILL SUITABLY MEET THE REQUIREMENTS OF THEIR INTENDED USE.

Omron further disclaims all warranties and responsibility of any type for claims or expenses based on infringement by the Products or otherwise of any intellectual property right. (c) Buyer Remedy. Omron's sole obligation hereunder shall be, at Omron's election, to (i) replace (in the form originally shipped with Buyer responsible for labor charges for removal or replacement thereof) the non-complying Product, (ii) repair the non-complying Product, or (iii) repay or credit Buyer an amount equal to the purchase price of the non-complying Product; provided that in no event shall Omron be responsible for warranty, repair, indemnity or any other claims or expenses regarding the Products unless Omron's analysis confirms that the Products were properly handled, stored, installed and maintained and not subject to contamination, abuse, misuse or inappropriate modification. Return of any Products by Buyer must be approved in writing by Omron before shipment. Omron Companies shall not be liable for the suitability or unsuitability or the results from the use of Products in combination with any electrical or electronic components, circuits, system assemblies or any other materials or substances or environments. Any advice, recommendations or information given orally or in writing, are not to be construed as an amendment or addition to the above warranty.

See http://www.omron.com/global/ or contact your Omron representative for published information.

Limitation on Liability; Etc.

OMRON COMPANIES SHALL NOT BE LIABLE FOR SPECIAL, INDIRECT, INCIDENTAL, OR CONSEQUENTIAL DAMAGES, LOSS OF PROFITS OR PRODUCTION OR COMMERCIAL LOSS IN ANY WAY CONNECTED WITH THE PRODUCTS, WHETHER SUCH CLAIM IS BASED IN CONTRACT, WARRANTY, NEGLIGENCE OR STRICT LIABILITY.

Further, in no event shall liability of Omron Companies exceed the individual price of the Product on which liability is asserted.

Suitability of Use.

Omron Companies shall not be responsible for conformity with any standards, codes or regulations which apply to the combination of the Product in the Buyer's application or use of the Product. At Buyer's request, Omron will provide applicable third party certification documents identifying ratings and limitations of use which apply to the Product. This information by itself is not sufficient for a complete determination of the suitability of the Product in combination with the end product, machine, system, or other application or use. Buyer shall be solely responsible for determining appropriateness of the particular Product with respect to Buyer's application, product or system. Buyer shall take application responsibility in all cases.

NEVER USE THE PRODUCT FOR AN APPLICATION INVOLVING SERIOUS RISK TO LIFE OR PROPERTY OR IN LARGE QUANTITIES WITHOUT ENSURING THAT THE SYSTEM AS A WHOLE HAS BEEN DESIGNED TO ADDRESS THE RISKS, AND THAT THE OMRON PRODUCT(S) IS PROPERLY RATED AND INSTALLED FOR THE INTENDED USE WITHIN THE OVERALL EQUIPMENT OR SYSTEM.

Programmable Products.

Omron Companies shall not be responsible for the user's programming of a programmable Product, or any consequence thereof.

Performance Data.

Data presented in Omron Company websites, catalogs and other materials is provided as a guide for the user in determining suitability and does not constitute a warranty. It may represent the result of Omron's test conditions, and the user must correlate it to actual application requirements. Actual performance is subject to the Omron's Warranty and Limitations of Liability.

Change in Specifications.

Product specifications and accessories may be changed at any time based on improvements and other reasons. It is our practice to change part numbers when published ratings or features are changed, or when significant construction changes are made. However, some specifications of the Product may be changed without any notice. When in doubt, special part numbers may be assigned to fix or establish key specifications for your application. Please consult with your Omron's representative at any time to confirm actual specifications of purchased Product.

Errors and Omissions.

Information presented by Omron Companies has been checked and is believed to be accurate; however, no responsibility is assumed for clerical, typographical or proofreading errors or omissions.

OMRON AUTOMATION AMERICAS HEADQUARTERS • Chicago, IL USA • 847.843.7900 • 800.556.6766 • automation.omron.com

OMRON CANADA, INC. • HEAD OFFICE
Toronto, ON, Canada • 416.286.6465 • 866.986.6766 • automation.omron.com

OMRON ELECTRONICS DE MEXICO • HEAD OFFICE
Ciudad de México • 52.55.5901.4300 • 01.800.386.6766 • mela@omron.com

OMRON GUADALAJARA
Torre NIBA Av. de las Américas 1462, Country Club, 44610, Piso 8,
Guadalajara, Jal. Tel. 55.5901.4300

OMRON ELETRÔNICA DO BRASIL LTDA • HEAD OFFICE
São Paulo, SP, Brasil • 55 11 5171-8920 • automation.omron.com

OMRON ARGENTINA • SALES OFFICE
Buenos Aires, Argentina • +54.11.4521.8630 • +54.11.4523.8483
mela@omron.com

OTHER OMRON LATIN AMERICA SALES
+54.11.4521.8630 • +54.11.4523.8483 • mela@omron.com

Controllers & I/O
• Machine Automation Controllers (MAC) • Motion Controllers
• Programmable Logic Controllers (PLC) • Temperature Controllers • Remote I/O

Operator Interfaces
• Human Machine Interface (HMI)

Motion & Drives
• Machine Automation Controllers (MAC) • Motion Controllers • Servo Systems
• Frequency Inverters

Vision, Measurement & Identification
• Vision Sensors & Systems • Measurement Sensors • Auto Identification Systems

Sensing
• Photoelectric Sensors • Fiber-Optic Sensors • Proximity Sensors
• Rotary Encoders • Ultrasonic Sensors

Safety
• Safety Light Curtains • Safety Laser Scanners • Programmable Safety Systems
• Safety Mats and Edges • Safety Door Switches • Emergency Stop Devices
• Safety Switches & Operator Controls • Safety Monitoring/Force-guided Relays

Control Components
• Power Supplies • Timers • Counters • Programmable Relays
• Digital Panel Meters • Monitoring Products

Switches & Relays
• Limit Switches • Pushbutton Switches • Electromechanical Relays
• Solid State Relays

Software
• Programming & Configuration • Runtime

Note: Specifications are subject to change.

© 2025 OMRON. All Rights Reserved.