Digital I/O Unit

CK3W-MD71□0

CSM_CK3W-MD71_0_DS_E_DITA_1_1

Digital I/O units for CK3M Controller

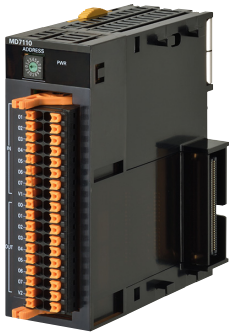

CK3W-MD71□0

Features

- Built-in 16 DC inputs and 16 transistor outputs
- Two different models: PNP and NPN

EtherCAT® is a registered trademark and patented technology, licensed by Beckhoff Automation GmbH, Germany.
Other company names and product names in this document are the trademarks or registered trademarks of their respective companies.
The product photographs and figures that are used in this catalog may vary somewhat from the actual products.

System Configurations

Basic System Configuration

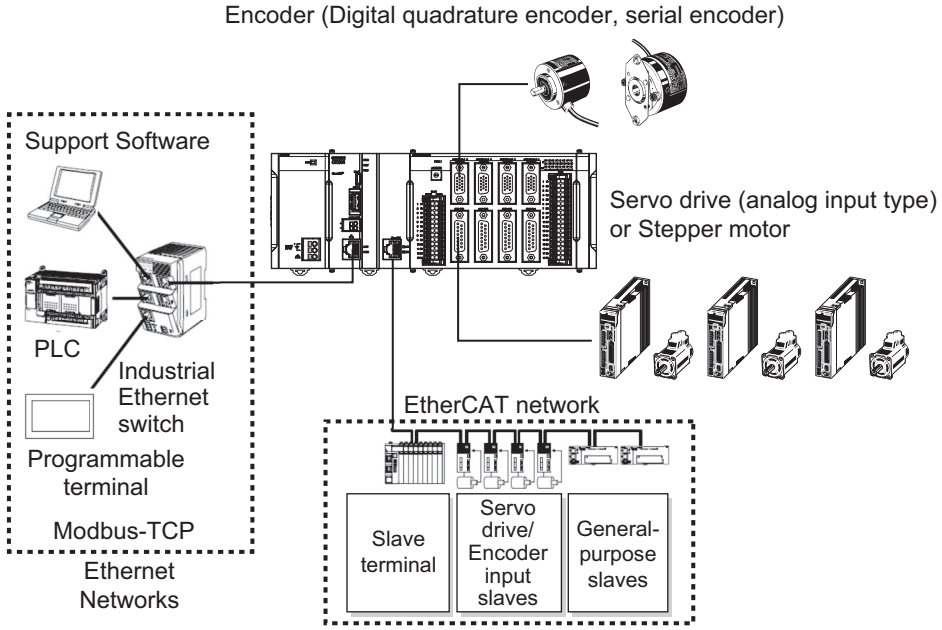

CK3W Unit Configuration (CPU Rack/Expansion Rack)

The following shows the configuration of CK3W Units.

CPU Rack

The CK3W Unit configuration in the CPU Rack consists of a Power Supply Unit, CPU Unit, CK3W-AX Unit, CK3W-MD Unit, CK3W-AD Unit, and End Cover.
Up to four CK3W Units (or up to two CK3W-AX Units) can be connected to the CPU Unit.

Expansion Rack

One Expansion Rack can be connected per CPU Unit.
To connect an Expansion Rack, use the Expansion Master Unit (CK3W-EXM01) and Expansion Slave Unit (CK3W-EXS02).
Up to four CK3W Units (or up to two CK3W-AX Units) can be installed to the Expansion Rack.
Connect the Expansion Master Unit (CK3W-EXM01) adjacent to the right side of the CPU Unit. Connect the Expansion Slave Unit (CK3W-EXS02) adjacent to the right side of the Power Supply Unit.
Unless the Expansion Master Unit (CK3W-EXM01) is connected adjacent to the right side of the CPU Unit, the Sys.Status register CK3WConfigErr becomes “5”.

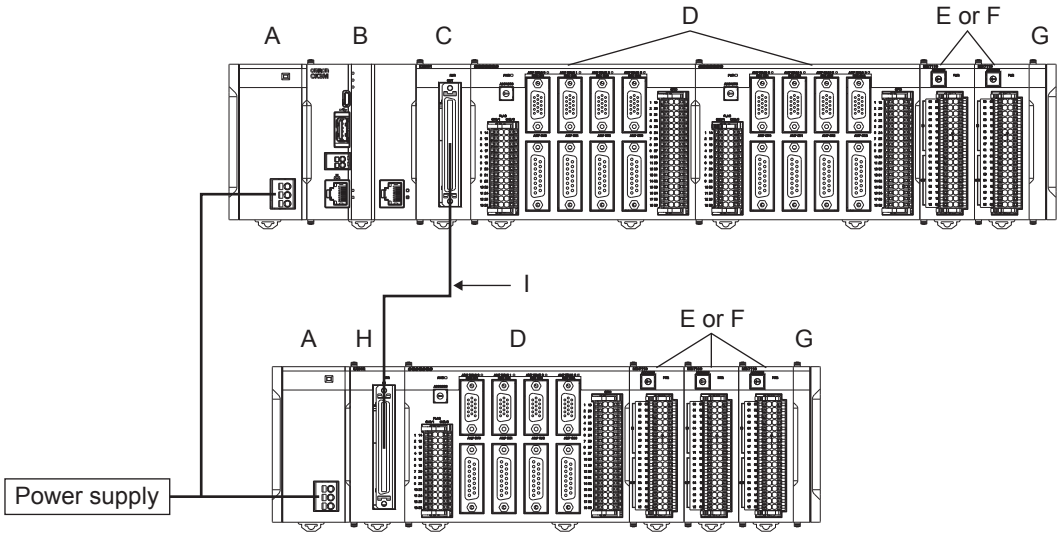

Letter	Configuration	Remarks
A	Power Supply Unit	Input the 24 V power source. Always wire the CPU Rack and Expansion Rack to the same power supply.
B	CK3M-series CPU Unit	This is the Unit at the center of the motion control, which executes the motion program.
C	CK3W-EXM01	Expansion Master Unit. Connect this Unit adjacent to the right side of the CPU Unit in the Expansion Rack.
D	CK3W-AX Unit	Axis Interface Unit. For axis control, connect this to a Servo Drive and encoder.
E	CK3W-MD Unit	Digital I/O Unit. You can add 16 digital inputs and 16 digital outputs.

Letter	Configuration	Remarks
F	CK3W-AD Unit	Analog Input Unit. You can add 4 or 8 voltage inputs.
G	End Cover	Must be connected to the right end of the CPU Rack and Expansion Rack. The CPU Unit and the Expansion Slave Unit are each provided with one End Cover.
H	CK3W-EXS02	Expansion Slave Unit. Use this in the Expansion Rack. Connect this Unit adjacent to the right side of the Power Supply Unit.
I	Expansion cable	Use this cable to connect the Expansion Master Unit and the Expansion Slave Unit. The cable length is 30 cm. Be sure to use the CK3W-CAX003A (30 cm) cable.

EtherCAT Network Configuration

The EtherCAT network configuration consists of a Power Supply Unit, CPU Unit, End Cover, and EtherCAT slaves.
Use the built-in EtherCAT port on the CK3M-series CPU Unit to connect EtherCAT slaves.

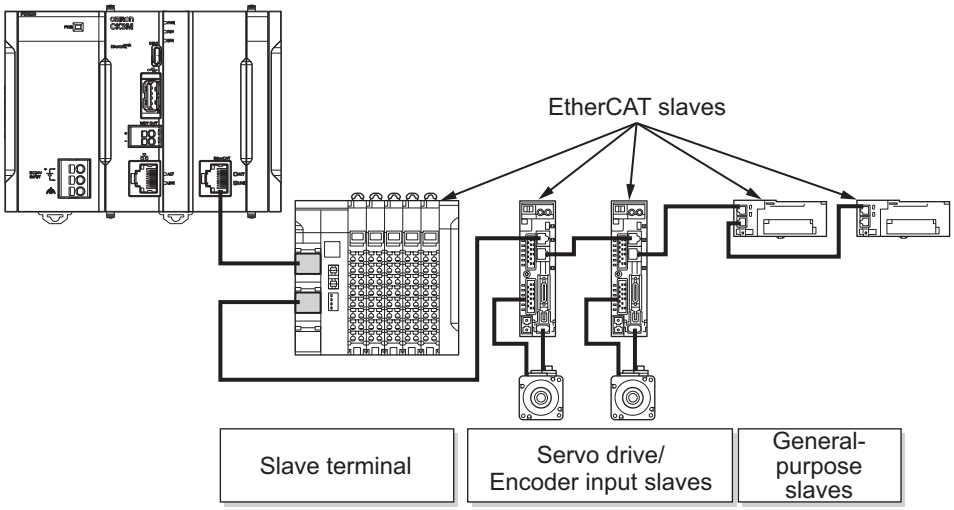

EtherCAT is synchronized with the servo cycle of the CK3M-series CPU Unit. This enables acquisition of the I/O data of slave terminals that are synchronized with the servo cycle.

Ordering Information

Digital I/O Units

Product name	Number of inputs	Number of outputs	I/O type	Model
Digital I/O Unit	16	16	NPN	**CK3W-MD7110**
			PNP	**CK3W-MD7120**

General Specifications

This section describes the Motion Controller specifications.

Item		Specification
Enclosure		Mounted in a panel
Grounding Method		Ground to less than 100 Ω.
Operating Environment	**Ambient Operating Temperature**	0 to 55°C
	Ambient Operating Humidity	10% to 95% (with no condensation or icing)
	Atmosphere	Must be free of corrosive gases.
	Ambient Storage Temperature	-25 to 70°C (with no condensation or icing)
	Vibration Resistance	Conforms to IEC 60068-2-6. 5 to 8.4 Hz with 3.5-mm amplitude, 8.4 to 150 Hz, acceleration of 9.8 m/s^2 100 min each in X, Y, and Z directions (10 sweeps of 10 min each = 100 min total)
	Shock Resistance	Conforms to IEC 60068-2-27. 147 m/s^2, 3 times each in X, Y, and Z directions
Insulation Resistance		20 MΩ min. between isolated circuits (at 100 VDC)
Dielectric Strength		510 VAC between isolated circuits for 1 minute with a leakage current of 5 mA max.
Applicable Standards		cULus, EU: EN 61326, RCM, KC, EAC

Specifications

Digital input (NPN/PNP)	**Number of inputs**	16 points
	Rated input voltage	24 VDC
	Maximum input voltage	26.4 VDC
	Input current	3.9 mA typical (24 VDC)
	ON voltage/ON current	15 VDC min./3 mA min.
	OFF voltage/OFF current	5 VDC max./1 mA max.
	ON/OFF response time	20 μs max./400 μs max.
	Isolation method	Isolation by Photocoupler (between input and internal circuit)
	Circuit configuration	NPN type 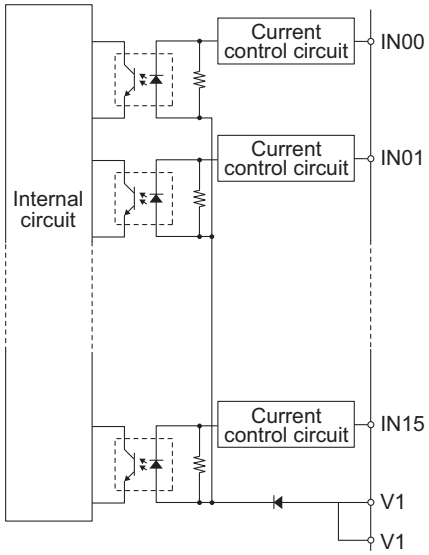
		PNP type 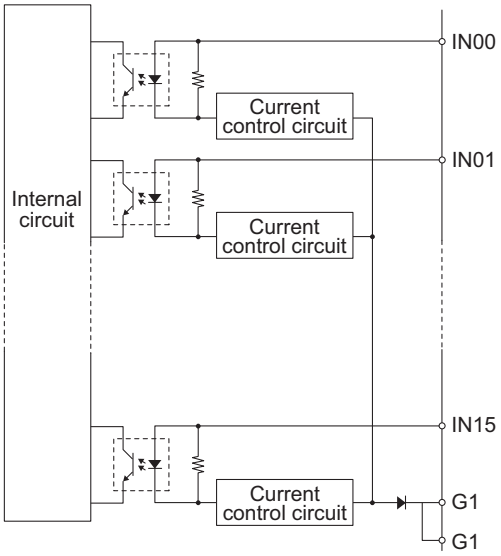

Digital input (NPN/PNP)	**Connection diagram**	NPN type 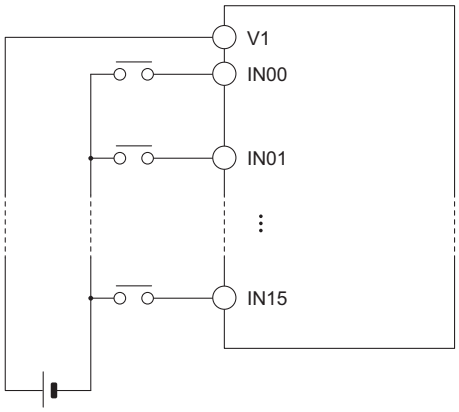
		PNP type 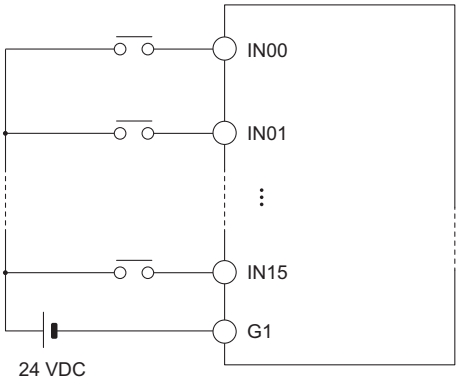
Digital output (NPN)	**Internal common**	NPN
	Rated voltage	12 to 24 VDC
	Current consumption	40 mA max.
	Operating load voltage range	10.2 to 26.4 VDC
	Maximum load current	0.5 A/point, 2 A/Unit
	Maximum inrush current	4.0 A/point, 10 ms max.
	Leakage current	0.1 mA max.
	Residual voltage	1.0 V max.
	ON/OFF response time	0.1 ms max./0.8 ms max.
	Isolation method	Isolation by Photocoupler (between output and internal circuit)
	Load short-circuit prevention	Not provided
	Circuit configuration	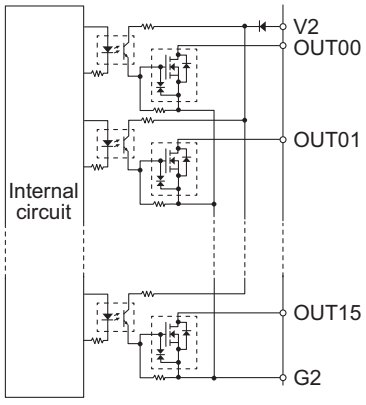

Digital output (NPN)	**Connection diagram**	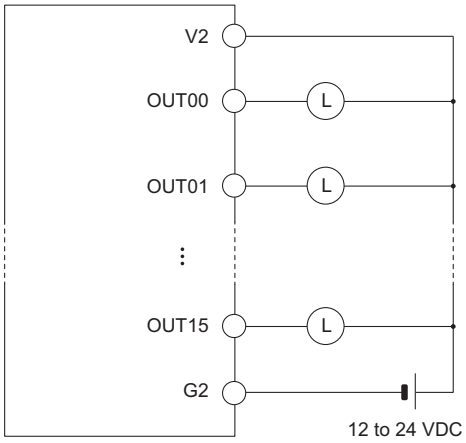
Digital output (PNP)	**Internal common**	PNP
	Rated voltage	12 to 24 VDC
	Current consumption	80 mA max.
	Operating load voltage range	10.2 to 26.4 VDC
	Maximum load current	0.5 A/point, 2 A/Unit
	Maximum inrush current	4.0 A/point, 10 ms max.
	Leakage current	0.1 mA max.
	Residual voltage	1.0 V max.
	ON/OFF response time	0.1 ms max./0.8 ms max.
	Isolation method	Isolation by Photocoupler (between output and internal circuit)
	Load short-circuit prevention	Provided
	Circuit configuration	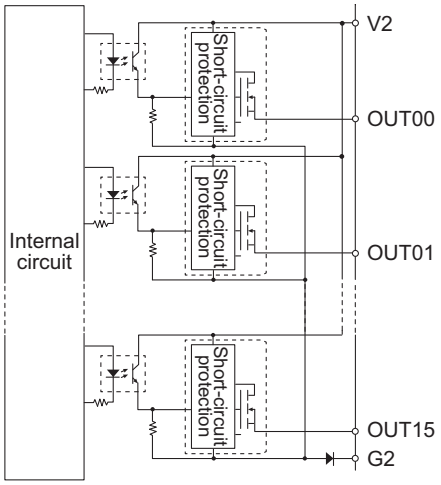
	Connection diagram	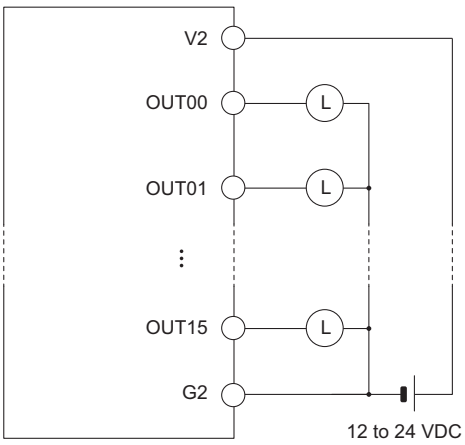
Power consumption		5 V: 1.0 W max.
Dimensions (height × depth × width)		90(H)/80(D)/31.6(W)
Weight		150 g max.

Part Names and Functions

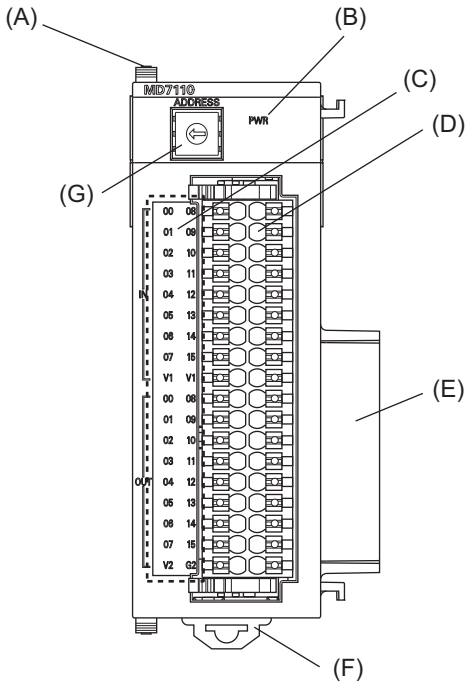

Letter	Name	Function
A	Slider	Holds the Units together.
B	Power supply status indicator	Shows the power supply status.
C	Digital input/output status indicator	Shows the digital input/output status.
D	Terminal block	Connects the digital input/output.
E	Unit connector	Connector that connects to the Unit.
F	DIN Track mounting hook	Used to mount the Unit to a DIN Track.
G	Address switch	Sets the Gate3 Index.

Wiring

Applicable Wires

The wires that you can connect to the terminal block are twisted wires, solid wires, and ferrules that are attached to the twisted wires. The following section describes the dimensions and processing methods for applicable wires.

Using Ferrules

If you use ferrules, attach the twisted wires to them.
Observe the application instructions for your ferrules for the wire stripping length when attaching ferrules.
Always use plated one-pin ferrules. Do not use unplated ferrules or two-pin ferrules.

The applicable ferrules, wires, and crimping tools are listed in the following table.

Manufacturer	Ferrule model	Applicable wire (mm^2 (AWG))	Crimping Tool (applicable wire size given in parentheses)
Phoenix Contact	AI0,5-10	0.5 (#20)	Phoenix Contact CRIMPFOX 6 (0.25 to 6 mm^2, AWG24 to 10)
	AI0,75-10	0.75 (#18)	
	AI1,0-10	1.0 (#18)	
	AI1,5-10	1.5 (#16)	
Weidmüller	H0.5/16	0.5 (#20)	Weidmüller PZ6 Roto (0.14 to 6 mm^2, AWG26 to 10)
	H0.75/16	0.75 (#18)	
	H1.0/16	1.0 (#18)	
	H1.5/16	1.5 (#16)	

Using Twisted or Solid Wires

Wire type	Conductor cross-sectional area	Conductor length (stripping length)
Solid wire	0.14 to 1.5 mm^2	10 mm
Twisted wire		

Required Tools

Use a flat-blade screwdriver to remove wires.
The recommended screwdriver is as follows.

Model	Manufacturer
SZF 0-0,4X2,5	Phoenix Contact

Dimensions

(Unit: mm)

Digital I/O Unit

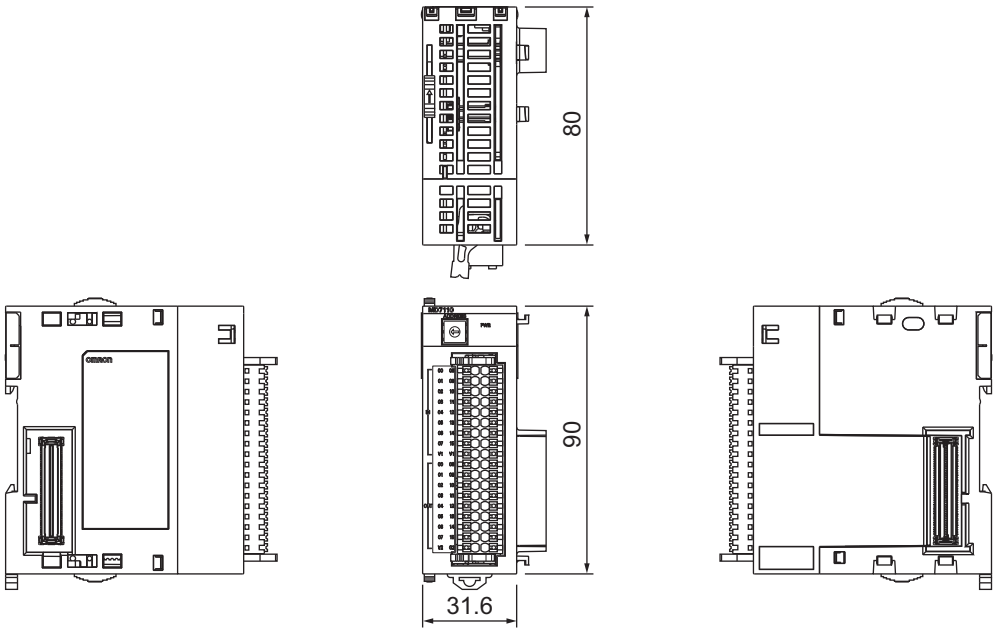

Related Manuals

The following manuals are related. Use these manuals for reference. Contact your OMRON representative for information on how to procure these manuals.

Manual name	Cat. No.	Application	Description
CK3M-series Programmable Multi-Axis Controller Hardware User's Manual	O036	Learning the basic specifications of the CK3M-series Programmable Multi-Axis Controller, including introductory information, design, installation, and maintenance. Mainly hardware information is provided.	An introduction to the entire CK3M-series system is provided along with the following information. • Features and system configuration • Introduction • Part names and functions • General specifications • Installation and wiring • Maintenance and inspection
Power PMAC User's Manual	O014	Learning the features and usage examples of the CK3M-series Programmable Multi- Axis Controller.	The following information is provided on the CK3M-series Programmable Multi-Axis Controller. • Basic functions • Setup examples • Programming examples
Power PMAC Software Reference Manual	O015	Learning how to program a CK3M-series Programmable Multi-Axis Controller.	The following information is provided on the CK3M-series Programmable Multi-Axis Controller. • Details of commands • Details of data structure
Power PMAC IDE User Manual	O016	Learning how to operate Power PMAC IDE, the integrated development environment of the Controller.	Describes the operating procedures of Power PMAC IDE, and examples of how to start the system.
Power PMAC-NC-16 Quick Start Manual	O017	Briefly understanding the basic usage of Power PMAC-NC16.	Describes the Quick setup procedure to run Power PMAC-NC16 on a desktop PC by showing some examples.
Power PMAC-NC16 .ini Configuration Manual	O018	Configuring an application for CNC devices by using Power PMAC-NC16.	Describes how to set up *PowerPmacNC.ini*, the setup data file to be loaded when Power PMAC-NC16 starts.
Power PMAC-NC16 Software User Manual	O019	Learning about usage and features of Power PMAC-NC16, Support Software required to use the Controller for CNC devices.	The following information is provided on Power PMAC-NC16. • How to use the software • Features included in the software • Features that can be customized
Power PMAC-NC16 Mill G-Code Manual	O020	Creating programs for CNC devices by using Power PMAC-NC16.	Describes the basic G-code set that can be used for Power PMAC-NC16, and relevant instructions.

OMRON AUTOMATION AMERICAS HEADQUARTERS • Chicago, IL USA • 847.843.7900 • 800.556.6766 • automation.omron.com

OMRON CANADA, INC. • HEAD OFFICE
Toronto, ON, Canada • 416.286.6465 • 866.986.6766 • automation.omron.com

OMRON ELECTRONICS DE MEXICO • HEAD OFFICE
Ciudad de México • 52.55.5901.4300 • 01.800.386.6766 • mela@omron.com

OMRON ELECTRONICS DE MEXICO • SALES OFFICE
San Pedro Garza García, N.L. • 81.12.53.7392 • 01.800.386.6766 • mela@omron.com

OMRON ELECTRONICS DE MEXICO • SALES OFFICE
Eugenio Garza Sada,León, Gto • 01.800.386.6766 • mela@omron.com

OMRON ELETRÔNICA DO BRASIL LTDA • HEAD OFFICE
São Paulo, SP, Brasil • 55.11.2101.6300 • www.omron.com.br

OMRON ARGENTINA • SALES OFFICE
Buenos Aires, Argentina • +54.11.4521.8630 • +54.11.4523.8483
mela@omron.com

OTHER OMRON LATIN AMERICA SALES
+54.11.4521.8630 • +54.11.4523.8483 • mela@omron.com

Authorized Distributor:

Controllers & I/O
• Machine Automation Controllers (MAC) • Motion Controllers
• Programmable Logic Controllers (PLC) • Temperature Controllers • Remote I/O

Robotics
• Industrial Robots • Mobile Robots

Operator Interfaces
• Human Machine Interface (HMI)

Motion & Drives
• Machine Automation Controllers (MAC) • Motion Controllers • Servo Systems
• Frequency Inverters

Vision, Measurement & Identification
• Vision Sensors & Systems • Measurement Sensors • Auto Identification Systems

Sensing
• Photoelectric Sensors • Fiber-Optic Sensors • Proximity Sensors
• Rotary Encoders • Ultrasonic Sensors

Safety
• Safety Light Curtains • Safety Laser Scanners • Programmable Safety Systems
• Safety Mats and Edges • Safety Door Switches • Emergency Stop Devices
• Safety Switches & Operator Controls • Safety Monitoring/Force-guided Relays

Control Components
• Power Supplies • Timers • Counters • Programmable Relays
• Digital Panel Meters • Monitoring Products

Switches & Relays
• Limit Switches • Pushbutton Switches • Electromechanical Relays
• Solid State Relays

Software
• Programming & Configuration • Runtime

I60I-E3-01 Note: Specifications are subject to change. © 2019 Omron. All Rights Reserved. Printed in U.S.A.

Printed on recycled paper.